JTSS-1600	Panel Saw

10000044M ~230V 50Hz
10000044T 3~400V 50Hz

PARTS LIST

TOOL FRANCE SARL

9 Rue des Pyrénées, 91090 LISSES, France

www.jettools.com

P-10000044M/T 2019-03

Parts Breakdown For JTSS-1600 Panel Saw --------Part A

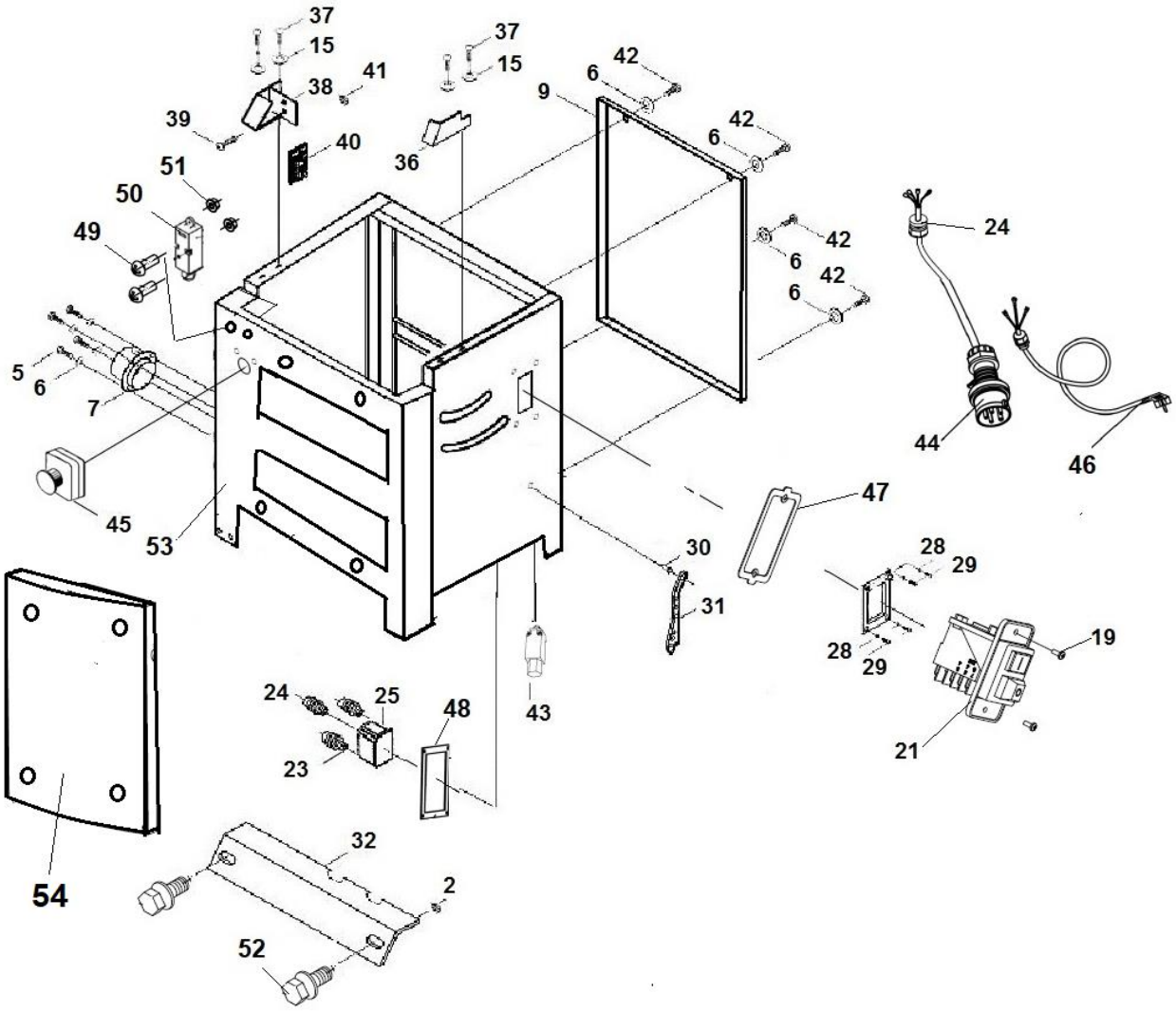

Parts List for JTSS-1600 Panel Saw ----- Part A

Index No.	Part No.	Description	Size	Qty.
2	JTSS1600-A02	Lock Nut	M5	2
3				
4				
5	JTSS1600-A05	Pan Head Screw	M6x12	4
6	JTSS1600-A06	Washer	6mm	8
7	JTSS1600-A07	Dust Port	Ø100mm	1
9	JTSS1600-A09	Right Panel, Saw Base		1
15	JTSS1600-A15	Washer	5mm	8
19	JTSS1600-A19	Taping Screw	ST4.2x20	2
21	JTSS1600-A21T	Main Switch 400V	400V 50Hz	1
	JTSS1600-A21M	Main Switch 230V	230V 50Hz	1
23	JTSS1600-A23	Plastic Plate		1
24	JTSS1600-A24	Strain Relief		3
25	JTSS1600-A25	Switch Box		1
28	JTSS1600-A28	Washer 4mm	4mm	4
29	JTSS1600-A29	Pan Head Screw	M4x12	4
30	JTSS1600-A30	Old Screw, Push Stick		1
31	JTSS1600-A31	Push Stick		1
32	JTSS1600-A32	Internal Guard		1
36	JTSS1600-A36	Angle Bracket		1
37	JTSS1600-A37	Pan Head Screw	M4x10	4
38	JTSS1600-A38	Angle Bracket		1
39	JTSS1600-A39	Hex Head Screw	M4x50	2
40	JTSS1600-A40	Limit Switch		1
41	JTSS1600-A41	Hex Nut M4	M4	2
42	JTSS1600-A42	Plate for Switch		1
43	JTSS1600-A43	Limit Switch	QKS8	1
44	JTSS1600-A44T	Plug 400V P551	3~400V 50Hz	1
	JTSS1600-A44M	Plug 230V P331	~ 230V 50Hz	1
45	JTSS1600-A45	E-Stop Switch		1
46	JTSS1600-A46M	Cord and Plug	~230V 50Hz	1
47	JTSS1600-A47	Rubber Washer A		1
48	JTSS1600-A48	Rubber Washer B		1
49	JTSS1600-A49	Pan Head Screw	M4x30	2
50	JTSS1600-A50	Limit Switch	QKS7	1
51	JTSS1600-A51	Hex Nut	M4	2
52	JTSS1600-A52	Hex Head Screw with Washer	M5x16	2
53	JTSS1600-A53	Saw Base Frame		1
54	JTSS1600-A54	Frame Door		1
	JET-138R900	JET 3D Logo(not Shown)	138x57R900	1
	JTSS1600-001T	ID Label(not Shown)	400V 50Hz	1
	JTSS1600-001M	ID Label(not Shown)	230V 50Hz	1
	JTSS1600-C47T	Motor Label(not Shown)	400V 50Hz	1
	JTSS1600-C47M	Motor Label(not Shown)	230V 50Hz	1
	JTSS1600-WR	Warning Label(not Shown)		1

Parts Breakdown for JTSS-1600 Panel Saw --------Part B

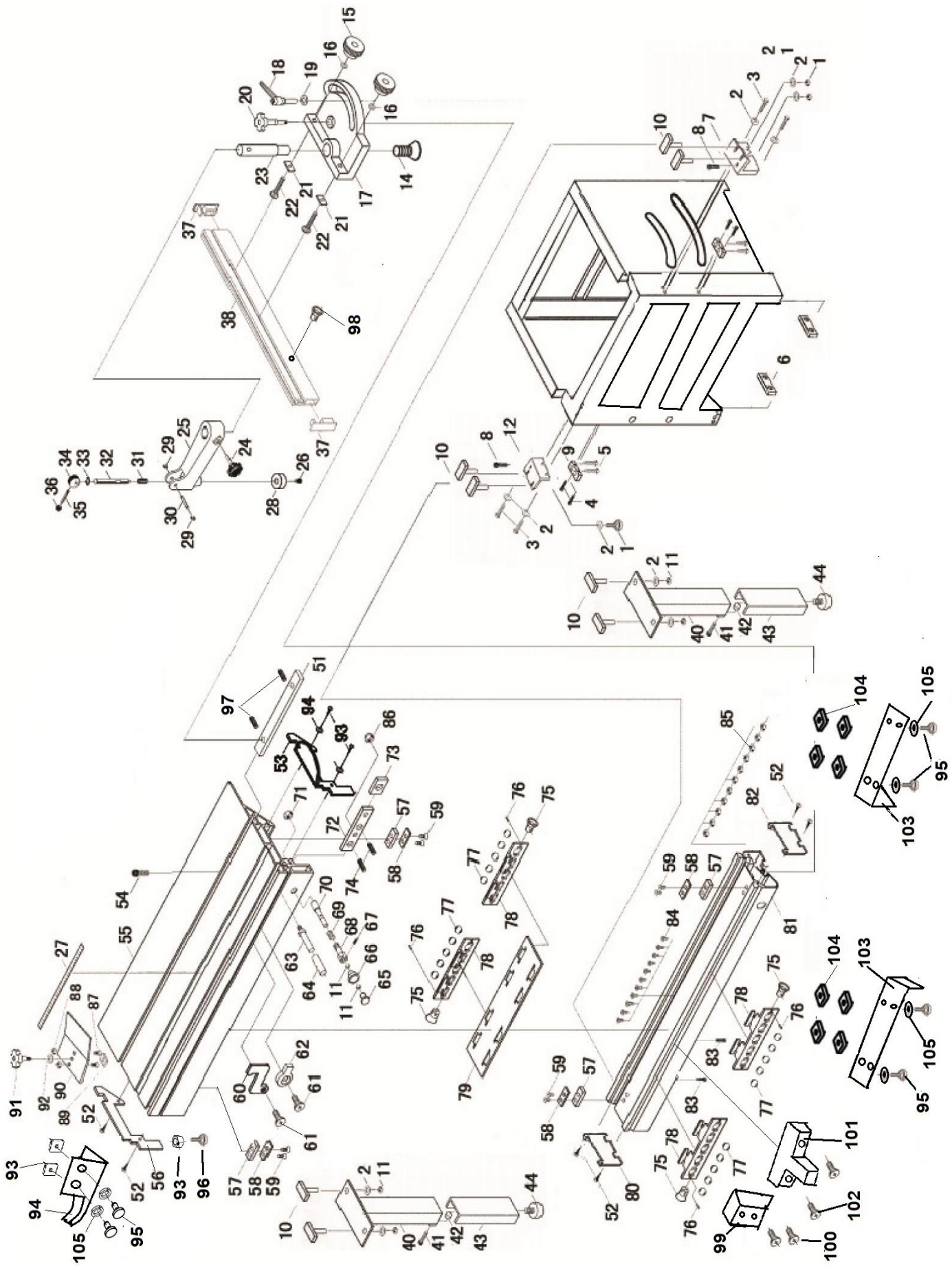

Parts List for JTSS-1600 Panel Saw ----- Part B

Index No.	Part No.	Description	Size	Qty.
1	JTSS1600-B01	Star - Type, Lock Handle		1
2	JTSS1600-B02	Flat Washer	8mm	12
3	JTSS1600-B03	Hex Screw	M8x25	4
4	JTSS1600-B04	Hex Screw	M8x40	4
5	JTSS1600-B05	Head Screw		4
6	JTSS1600-B06	T- Base, Adjust		2
7	JTSS1600-B07	Bracket, Sliding Carrier		1
8	JTSS1600-B08	Stop Screw		2
9	JTSS1600-B09	T- Base, Adjust		2
10	JTSS1600-B10	T- Nut, Sliding Carrier		8
11	JTSS1600-B11	Hex Nut M8	M8	12
12	JTSS1600-B12	Bracket, Sliding Carrier		1
13	JTSS1600-B13			
14	JTSS1600-B14	Sunk Head Screw	M8x25	1
15	JTSS1600-B15	Wing Nut		2
16	JTSS1600-B16	Washer	6mm	2
17	JTSS1600-B17	Mitre Gauge, Hold Down		1
18	JTSS1600-B18	Ratchet Lever		1
19	JTSS1600-B19	Flat Washer 10mm	10mm	1
20	JTSS1600-B20	Star - Type Lock Handle		1
21	JTSS1600-B21	T- Block		2
22	JTSS1600-B22	Carriage Bolt	M6x40	2
23	JTSS1600-B23	Stud, Hold Down		1
24	JTSS1600-B24	Star - Type Knob, Hold Down		1
25	JTSS1600-B25	Arm, Hold Down		1
26	JTSS1600-B26	Allen Screw	M5x16	1
27	JTSS1600-B27	Scale, Sliding Table		1
28	JTSS1600-B28	Disc, Hold Down		1
29	JTSS1600-B29	Circle Ring	8mm	2
30	JTSS1600-B30	Pin, Hold Down		1
31	JTSS1600-B31	Spring, Hold Down		1
32	JTSS1600-B32	Stud, Hold Down		1
33	JTSS1600-B33	Circle Ring	12mm	1
34	JTSS1600-B34	Eccentric, Hold Down		1
35	JTSS1600-B35	Handle, Hold Down		1
36	JTSS1600-B36	Handle Knob, Hold Down		1
37	JTSS1600-B37	End Cap, Fence		2
38	JTSS1600-B38	Fence, Mitre Gauge		1
40	JTSS1600-B40	Upper Support		2
41	JTSS1600-B41	Allen Screw	M8x25	2
42	JTSS1600-B42	Disc, Insert		2
43	JTSS1600-B43	Lower Support		2
44	JTSS1600-B44	Adjustable Disc		2
51	JTSS1600-B51	Screw Guide		1
52	JTSS1600-B52	Taping Screw	ST4.2x12	4
53	JTSS1600-B53	End Cap, Sliding Panel		1
54	JTSS1600-B54	Allen Screw	M5x8	1
55	JTSS1600-B55	Sliding Panel Set		1
56	JTSS1600-B56	End Cap, Sliding Panel		1
57	JTSS1600-B57	Stop Plate		2
58	JTSS1600-B58	Stop Plate		1
59	JTSS1600-B59	Sunk Head Screw	M6x18	4
60	JTSS1600-B60	"Z" Lock Plate		1
61	JTSS1600-B61	Sunk Head Screw	M6x20	4
62	JTSS1600-B62	Eccentric Cam		2

Parts List for JTSS-1600 Panel Saw ----- Part B

Index No.	Part No.	Description	Size	Qty.
63	JTSS1600-B63	Push Handle		1
64	JTSS1600-B64	Bush, Push Handle		1
65	JTSS1600-B65	End Cap, Knob		1
66	JTSS1600-B66	Star - Type Knob, Lock Pin		1
67	JTSS1600-B67	Roll Pin	3x18	1
68	JTSS1600-B68	Bush, Lock Pin		1
69	JTSS1600-B69	Spring, Lock Pin		1
70	JTSS1600-B70	Lock Pin		1
71	JTSS1600-B71	Hex Nut	M10	1
72	JTSS1600-B72	Lock Guide		1
73				
74	JTSS1600-B74	Set Screw	M8x12	2
75	JTSS1600-B75	Insert, Ball Frame		4
76	JTSS1600-B76	Roll Pin 2x8	2x8	4
77	JTSS1600-B77	Ball	1/2"	20
78	JTSS1600-B78	Ball Frame		4
79	JTSS1600-B79	Ball Frame		1
80	JTSS1600-B80	End Cap, Sliding Rail		1
81	JTSS1600-B81	Sliding Table Rail		1
82	JTSS1600-B82	End Cap, Sliding Rail		1
83	JTSS1600-B83	Allen Screw	M6x10	2
84	JTSS1600-B84	Sunk Head Screw	M8x20	11
85	JTSS1600-B85	Lock Nut	M8	11
86	JTSS1600-B86	Lock Nut	M6	1
87	JTSS1600-B87	Thread Stud		2
88	JTSS1600-B88	Hex Nut	M8	2
89	JTSS1600-B89	T- Block		1
90	JTSS1600-B90	Edge Shoe		1
91	JTSS1600-B91	Star type Screw	M8x20	1
92	JTSS1600-B92	Washer	8mm	1
93	JTSS1600-B93	Hex Nut	M8	1
94	JTSS1600-B94	Limit Block Key		1
95	JTSS1600-B95	Hex Bolt	M8x16	10
96	JTSS1600-B96	Set Screw	M8x12	1
97	JTSS1600-B97	Set Screw	M6x10	2
98	JTSS1600-B98	Pan Head Screw	M5x8	1
99	JTSS1600-B99	Limit Stop Block		1
100	JTSS1600-B100	Flat type Screw	M5x12	2
101	JTSS1600-B101	Stop Base		1
102	JTSS1600-B102	Pan Head Screw	M8x20	2
103	JTSS1600-B103	Plate		2
104	JTSS1600-B104	Limit Block		8
105	JTSS1600-B105	Washer	8	10

Parts Breakdown for JTSS-1600 Panel Saw --------Part C

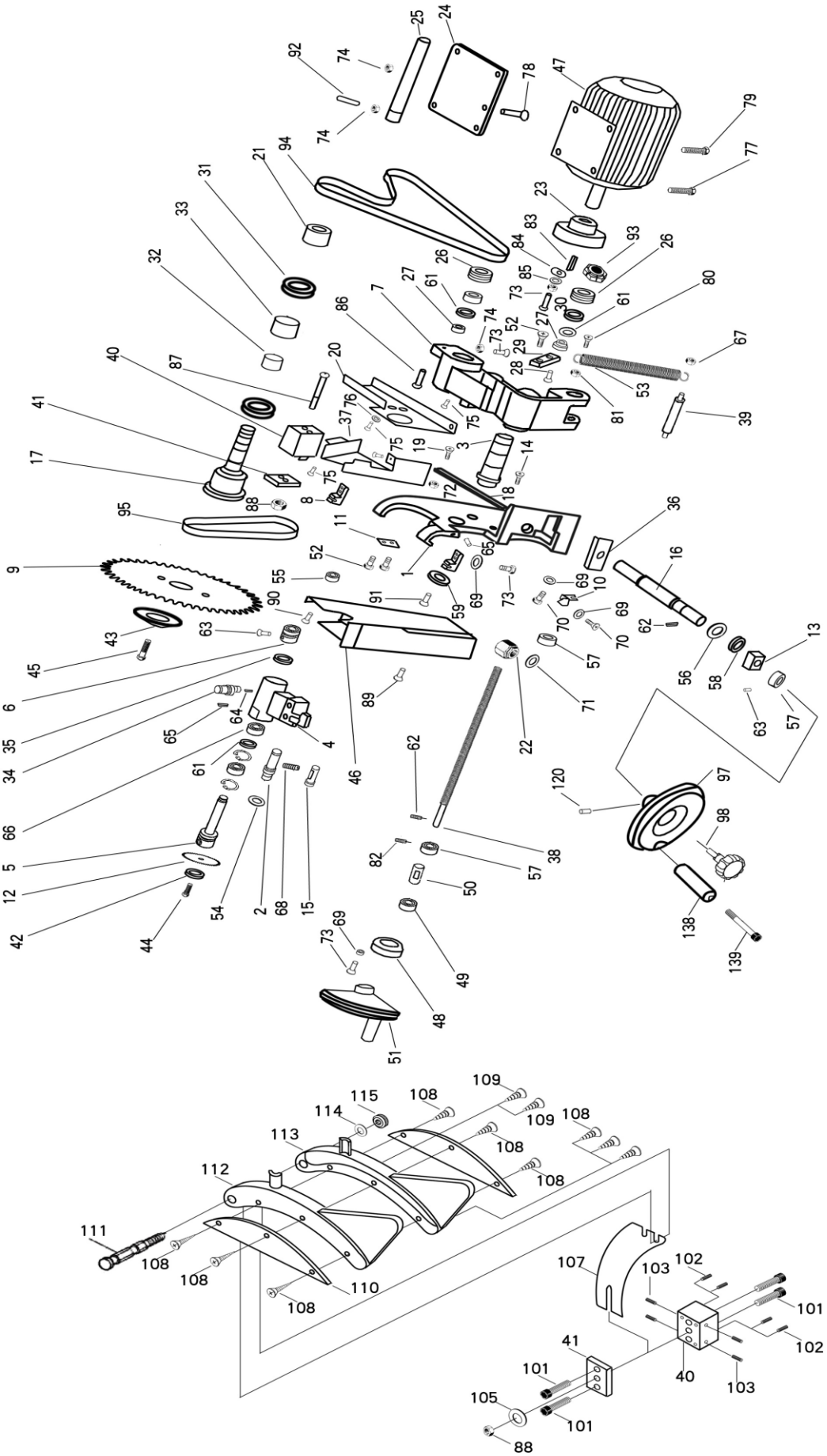

Parts List for JTSS-1600 Panel Saw ----- Part C

Index No.	Part No.	Description	Size	Qty.
1	JTSS1600-C01	Frame - Blade		1
2	JTSS1600-C02	Shaft- Main Blade		1
3	JTSS1600-C03	Main Shaft		1
4	JTSS1600-C04	Shaft Housing- Scoring Blade		1
5	JTSS1600-C05	Shaft- Scoring Blade		1
6	JTSS1600-C06	Pulley - Scoring Blade		1
7	JTSS1600-C07	Gear House		1
8	JTSS1600-C08	Rotating Support		2
9	JTSS1600-C09	Main Blade		1
10	JTSS1600-C10	Pointer		1
11	JTSS1600-C11	Slide Piece		1
12	JTSS1600-C12	Scoring Blade		1
13	JTSS1600-C13	Bearing House		1
14	JTSS1600-C14	Shaft		1
15	JTSS1600-C15	Stop, Scoring Blade		1
16	JTSS1600-C16	Thread		1
17	JTSS1600-C17	Main Shaft		1
18	JTSS1600-C18	R Od		1
19	JTSS1600-C19	Shaft		1
20	JTSS1600-C20	Frame Segment		1
21	JTSS1600-C21	Pulley		1
22	JTSS1600-C22	Hex Nut		1
23	JTSS1600-C23	Pulley - Motor		1
24	JTSS1600-C24	Motor Base		1
25	JTSS1600-C25	Shaft		1
26	JTSS1600-C26	Pulley		2
27	JTSS1600-C27	Tension Shaft		1
28	JTSS1600-C28	Sunken Head Screw	M8x20	1
29	JTSS1600-C29	Tension Rod		1
30	JTSS1600-C30	Bearing	6002RZ	2
31	JTSS1600-C31	Bearing	6205RZ	2
32	JTSS1600-C32	Spacer		1
33	JTSS1600-C33	Spacer		1
34	JTSS1600-C34	Eccentric Shaft		1
35	JTSS1600-C35	Circle Nut		1
36	JTSS1600-C36	Nut		1
37	JTSS1600-C37	Belt Guard		1
38	JTSS1600-C38	Thread		1
39	JTSS1600-C39	Shaft, Spring		1
40	JTSS1600-C40	Insert		1
41	JTSS1600-C41	Segment		1
42	JTSS1600-C42	Flange, Scoring Blade		1
43	JTSS1600-C43	Flange		1
44	JTSS1600-C44	Set Screw	M8x16	1
45	JTSS1600-C45	Allen Screw	M10x25	1
46	JTSS1600-C46	Chip House		1
47	JTSS1600-C47T	Motor 400V	3~400V 50Hz	1
	JTSS1600-C47M	Motor 230V	~230V 50Hz	1
	JTSS1600-C47MRC	Running Capacitor	450V / 50uf	1
	JTSS1600-C47MSC	Starting Capacitor	265V / 300uf	1
	JTSS1600-C47MF	Motor Fan		1
	JTSS1600-C47MFC	Motor Fan Cover		1
48	JTSS1600-C48	Flange		1
49	JTSS1600-C49	Ball Bearing		1
50	JTSS1600-C50	Tube		1
51	JTSS1600-C51	Wheel Handle		1
52	JTSS1600-C52	Thread		1

Parts List for JTSS-1600 Panel Saw ----- Part C

Index No.	Part No.	Description	Size	Qty.
53	JTSS1600-C53	Spring		1
54	JTSS1600-C54	Washer		1
55	JTSS1600-C55	Spacer		1
56	JTSS1600-C56	Spacer		1
57	JTSS1600-C57	Circle Ring		1
58	JTSS1600-C58	Thrust Bearing		1
59	JTSS1600-C59	Washer		1
60	-----			
61	JTSS1600-C61	Circle Ring	326	5
62	JTSS1600-C62	Roll Pin	5x28	1
63	JTSS1600-C63	Set Screw	M6x8	1
64	JTSS1600-C64	Roll Pin	A6x8	1
65	JTSS1600-C65	Set Screw	M8x12	1
66	JTSS1600-C66	Bearing	6002	2
67	JTSS1600-C67	Lock Nut	M6	1
68	JTSS1600-C68	Set Screw	M8x12	1
69	JTSS1600-C69	Washer	8mm	1
70	JTSS1600-C70	Hex Head Screw	M8x12	1
71	JTSS1600-C71	Circle Ring	A20	1
72	JTSS1600-C72	Circle Ring		1
73	JTSS1600-C73	Hex Head Screw	M6x12	1
74	JTSS1600-C74	Hex Nut	M8	4
75	JTSS1600-C75	Pan Head Screw	M6x12	1
76	JTSS1600-C76	Flat Washer	6mm	1
77	JTSS1600-C77	Hex Head Screw	M8x35	1
78	JTSS1600-C78	Sunken Head Screw	M8x40	1
79	JTSS1600-C79	Hex Head Screw	M6x20	
80	JTSS1600-C80	Allen Screw	M6x20	1
81	JTSS1600-C81	Hex Nut	M6	1
82	JTSS1600-C82	Set Screw	M8x8	1
83	JTSS1600-C83	Flat Hey	18x35	1
84	JTSS1600-C84	Flat Washer	8mmm	1
85	JTSS1600-C85	Spring Washer	8mm	1
86	JTSS1600-C86	Allen Screw	M8x30	1
87	JTSS1600-C87	Carriage Bolt	M10x80C	1
88	JTSS1600-C88	Hex Nut	M10	1
89	JTSS1600-C89	Hex Head Screw	M8x16	1
90	JTSS1600-C90	Sunken Head Screw	M10x25	1
91	JTSS1600-C91	Hex Head Screw	M10x25	1
92	JTSS1600-C92	Set Screw	M8x16	1
93	JTSS1600-C93	Nut	M35x1	1
94	JTSS1600-C94	Multi. “V” Belt	660	1
95	JTSS1600-C95	Multi. “V” Belt	560	1
97	JTSS1600-C97	Handle		1
98	JTSS1600-C98	Set Handle		1
101	JTSS1600-C101	Stop Screw		4
102	JTSS1600-C102	Set Screw	M8x20	4
103	JTSS1600-C103	Set Screw	M8x20	4
105	JTSS1600-C105	Spring Washer	10mm	1
107	JTSS1600-C107	Riving Knife		1
108	JTSS1600-C108	Taping Screw	ST4.2x10	3
109	JTSS1600-C109	Taping Screw	ST4.2x26	2
110	JTSS1600-C110	Segment, Blade Guard		1
111	JTSS1600-C111	Lock Bolt, Guard		1
112	JTSS1600-C112	Half, Blade Guard		1
113	JTSS1600-C113	Half, Blade Guard		1
114	JTSS1600-C114	Lock Washer 8mm	8mm	1

Parts List for JTSS-1600 Panel Saw ----- Part C

115	JTSS1600-C116	Knurled nut	M8	1
120	JTSS1600-C120	Pin		1
138	JTSS1600-C138	Handle Knob		1
139	JTSS1600-C139	Handle Screw		1

Parts Breakdown for JTSS-1600 Panel Saw --------Part D

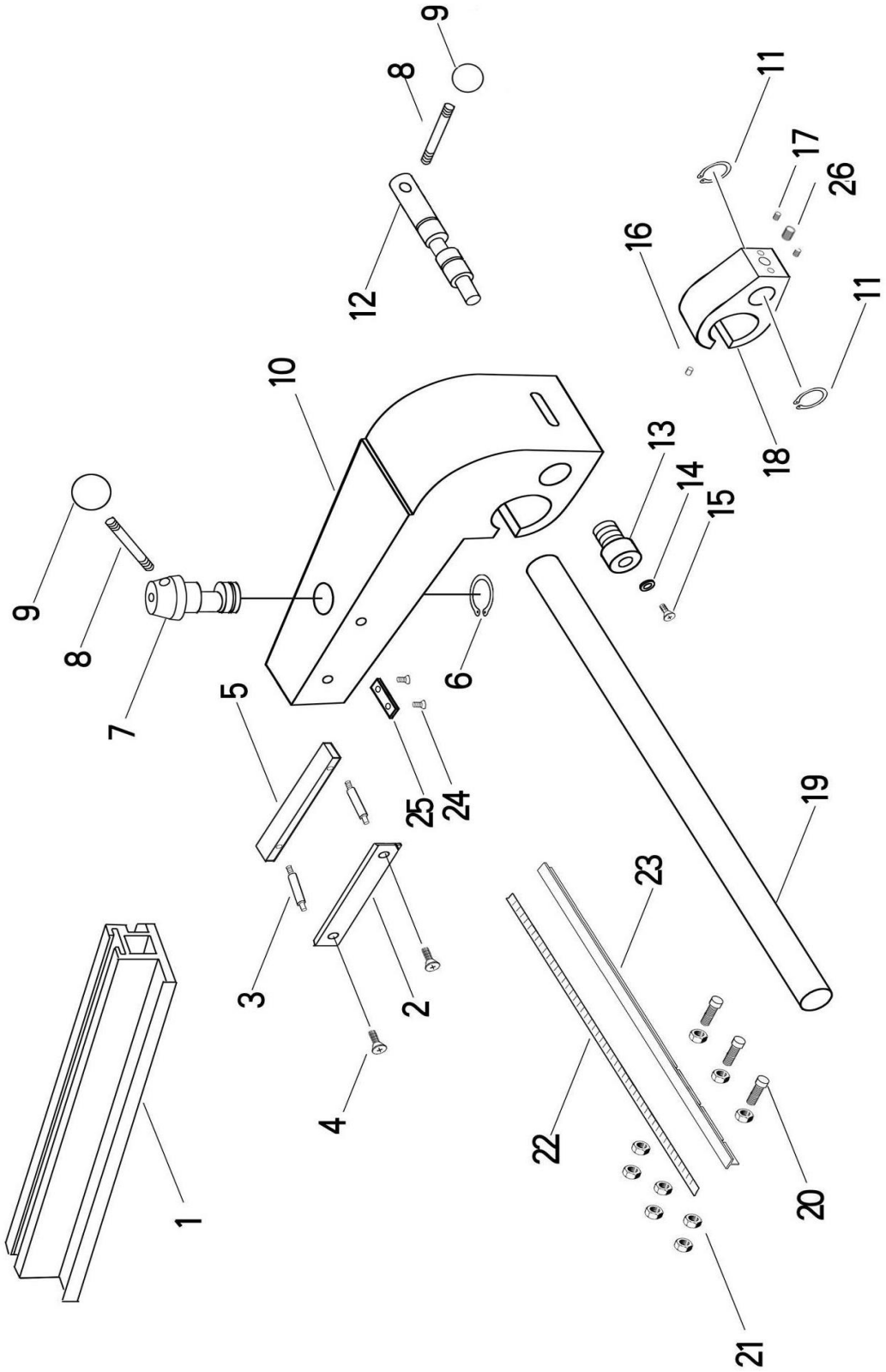

Parts List for JTSS-1600 Panel Saw ----- Part D

Index No.	Part No.	Description	Size	Qty.
1	JTSS1600-D01	L Type Aluminum Baffle		1
2	JTSS1600-D02	Locking Plate		1
3	JTSS1600-D03	The Positioning Shaft		2
4	JTSS1600-D04	Countersunk Head Screw	M5x16	4
5	JTSS1600-D05	Connecting Plate		1
6	JTSS1600-D06	Retaining Rings For Shafts	20	1
7	JTSS1600-D07	L Type Aluminum Locking Shaft		1
8	JTSS1600-D08	Handle		2
9	JTSS1600-D09	Handball		2
10	JTSS1600-D10	Slide Block		1
11	JTSS1600-D11	Retaining Rings For Shafts	20	2
12	JTSS1600-D12	Slide Block Shaft		1
13	JTSS1600-D13	Thread Bushing		1
14	JTSS1600-D14	Washer	5mm	1
15	JTSS1600-D15	Countersunk Head Screw	M5x16	1
16	JTSS1600-D16	The Locking Block Mandrel		1
17	JTSS1600-D17	Inner Six Angle Locking		2
18	JTSS1600-D18	Locking Block		1
19	JTSS1600-D19	Side Guide		1
20	JTSS1600-D20	Screw		5
21	JTSS1600-D21	Nut		15
22	JTSS1600-D22	Track Scale		1
23	JTSS1600-D23	The Scale Fixing Plate		1
24	JTSS1600-D24	Countersunk Head Screw	M5x10	2
25	JTSS1600-D25	The Bottom Baffle		1
26	JTSS1600-D26	Set Screw	M12x10	1

Parts Breakdown for JTSS-1600 Panel Saw-------Part E

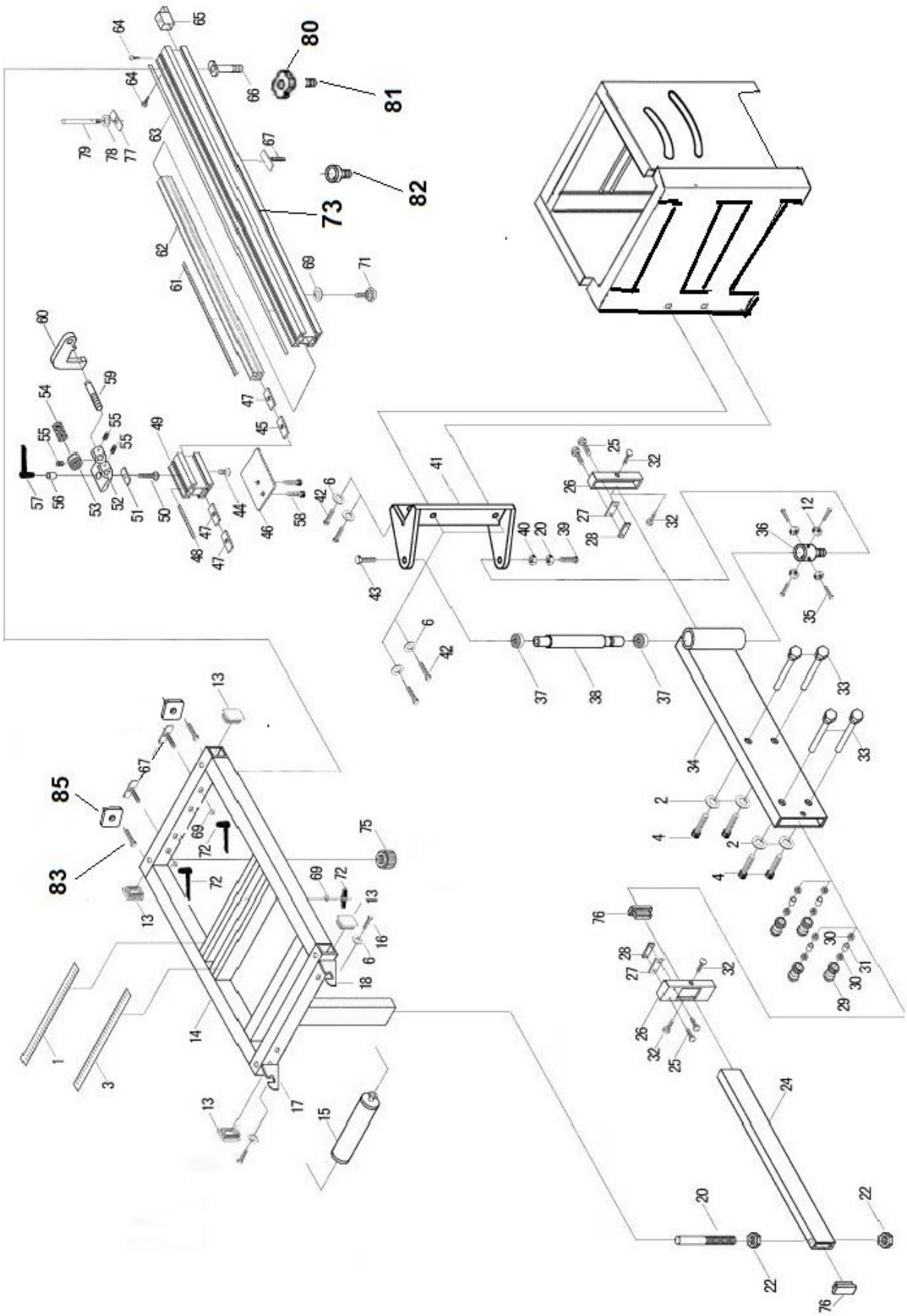

Parts List for JTSS-1600 Panel Saw ----- Part E

Index No.	Part No.	Description	Size	Qty.
1	JTSS1600-E01	Scale, Cross Cut Table		1
2	JTSS1600-E02	Washer	6mm	4
3	JTSS1600-E03	Scale, Cross Cut Table		1
4	JTSS1600-E04	Allen Screw	M6x12	4
5	JTSS1600-E05	Eccentric Cam	80106	
6	JTSS1600-E06	Washer	8mm	6
7	JTSS1600-E07	Sunk Head Screw	M6x10	
8	JTSS1600-E08	"Z" Lock Plate		
9	JTSS1600-E09	"Z" Lock Plate		
10	JTSS1600-E10	Hex Screw	M8x20	
11	JTSS1600-E11	Lock Nut	M6	
12	JTSS1600-E12	Hex Nut	M6	
13	JTSS1600-E13	End Cap, Cross Cut Table		
14	JTSS1600-E14	Cross Cut Table		
15	JTSS1600-E15	Roller		
16	JTSS1600-E16	Hex Screw	M8x12	
17	JTSS1600-E17	Bracket, Roller		
18	JTSS1600-E18	Bracket, Roller		
20	JTSS1600-E20	Support Rod, Cross Cut Table		1
22	JTSS1600-E22	Thin Hex Nut	M10	2
24	JTSS1600-E24	Swing Arm, Extension		1
25	JTSS1600-E25	Pan Head Screw	M5x12	4
26	JTSS1600-E26	Insert, Swing Arm		2
27	JTSS1600-E27	Woolen Sheet		2
28	JTSS1600-E28	Block		2
29	JTSS1600-E29	Roll		4
30	JTSS1600-E30	Bearing	6101	8
31	JTSS1600-E31	Spacer, Roll		4
32	JTSS1600-E32	Pan Head Screw	M5x6	4
33	JTSS1600-E33	Eccentric Shaft		4
34	JTSS1600-E34	Swing Arm		1
35	JTSS1600-E35	Hex Screw	M6x35	4
36	JTSS1600-E36	Stop Collar		1
37	JTSS1600-E37	Bearing	6202	2
38	JTSS1600-E38	Shaft, Swing Arm		1
39	JTSS1600-E39	Hex Screw	M8x50	1
40	JTSS1600-E40	Thin Nut	M16	1
41	JTSS1600-E41	Support, Swing Arm		1
42	JTSS1600-E42	Hex Screw	M8x30	4
43	JTSS1600-E43	Hex Screw	M10x25	1
44	JTSS1600-E44	Sunk Head Screw	M6x12	1
45	JTSS1600-E45	T- Nut, Extension Fence		1
46	JTSS1600-E46	Lock Plate		1
47	JTSS1600-E47	T- Block		1
48	JTSS1600-E48	Scale		1
49	JTSS1600-E49	End, Extension Fence		1
50	JTSS1600-E50	Carriage Bolt	M6x38	1
51	JTSS1600-E51	Screw Guide		1
52	JTSS1600-E52	Flip Stop Base		1
53	JTSS1600-E53	Knurled Knob		1
54	JTSS1600-E54	Spring, Flip Stop		1
55	JTSS1600-E55	Set Screw		2
56	JTSS1600-E56	Spacer , Ratchet Lever		1
57	JTSS1600-E57	Ratchet Lever, Flip Stop		1
58	JTSS1600-E58	Allen Screw M8x20	M8x20	2

Parts List for JTSS-1600 Panel Saw ----- Part E

Index No.	Part No.	Description	Size	Qty.
59	JTSS1600-E59	Stud, Flip Stop		1
60	JTSS1600-E60	Flip Stop		1
61	JTSS1600-E61	Scale A		1
62	JTSS1600-E62	Extension Fence		1
63	JTSS1600-E63	Scale B		1
64	JTSS1600-E64	Taping Screw	ST4.2x12	1
65	JTSS1600-E65	End Cap, Cross Cut Fence		1
66	JTSS1600-E66	Lock Stud, Cross Cut Fence		1
67	JTSS1600-E67	T- Block		3
69	JTSS1600-E69	Flat Washer		2
70	JTSS1600-E70	Spacer, Lock Handle		
71	JTSS1600-E71	Star - Type Lock Handle		1
72	JTSS1600-E72	Wing Nut	M8	3
73	JTSS1600-E73	Cross Cut Fence		1
74	JTSS1600-E74	T- Block		1
75	JTSS1600-E75	Knurled Knob, Fence		1
76	JTSS1600-E76	End Cap, Swing Arm		2
77	JTSS1600-E77	T- Block, Hold Down		1
78	JTSS1600-E78	Washer	12mm	1
79	JTSS1600-E79	Stud, Hold Down		1
80	JTSS1600-E80	Limit Block		1
81	JTSS1600-E81	Set Screw	M6x8	1
82	JTSS1600-E82	Set Bolt		1
83	JTSS1600-E83	Hex Bolt	M8x60	2
85	JTSS1600-E79	Limit Block		2

Parts Breakdown for JTSS-1600 Panel Saw --------Part G

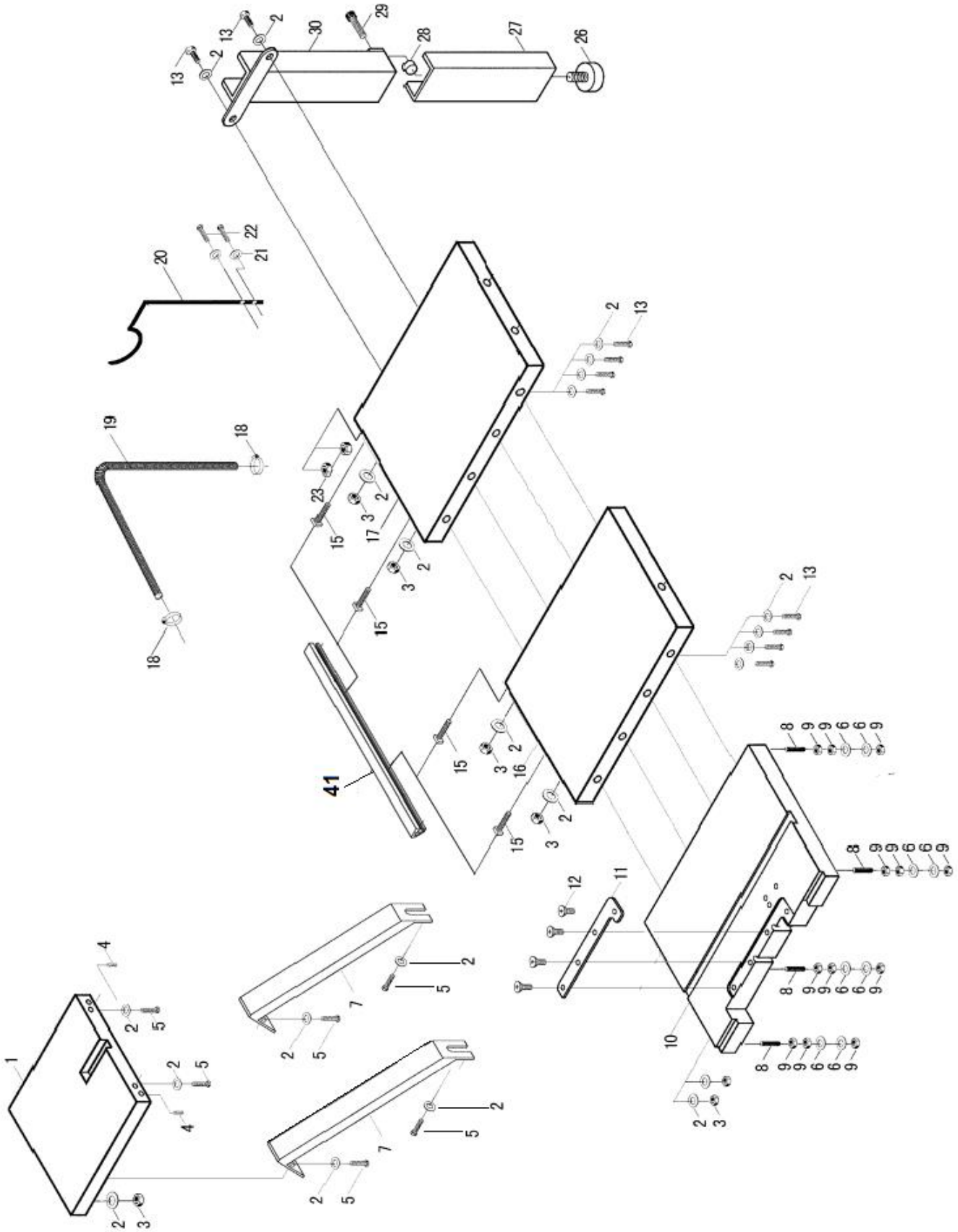

Parts List for JTSS-1600 Panel Saw ----- Part G

Index No.	Part No.	Description	Size	Qty.
1	JTSS1600-G01	Rear Extension Table		1
2	JTSS1600-G02	Washer	8mm	18
3	JTSS1600-G03	Hex Nut	M8	7
4	JTSS1600-G04	Set Screw	M6x12	2
5	JTSS1600-G05	Hex Screw	M8x16	6
6	JTSS1600-G06	Flat Washer	10mm	8
7	JTSS1600-G07	Rea Table Support		2
8	JTSS1600-G08	Set Screw	M10x70	4
9	JTSS1600-G09	Hex Nut	M10	12
10	JTSS1600-G10	Major Table		1
11	JTSS1600-G11	Table Insert		1
12	JTSS1600-G12	Sunk Head Screw	M5x10	4
13	JTSS1600-G13	Hex Screw	M8x20	10
14				
15	JTSS1600-G15	Square Head Screw	M8x25	4
16	JTSS1600-G16	Extension Table		1
17	JTSS1600-G17	Steel Extension Table		1
18	JTSS1600-G18	Hose Clamp	30mm	2
19	JTSS1600-G19	Dust Hose 30mm Dia.X3240mm		1
20	JTSS1600-G20	Dust Hose Support		1
21	JTSS1600-G21	Washer	6mm	2
22	JTSS1600-G22	Hex Screw	M6x20	2
23	JTSS1600-G23	Hex Nut	M6	2
26	JTSS1600-G26	Adjustable Disc	M12x30	1
27	JTSS1600-G27	Lower, Support		1
28	JTSS1600-G28	Disc Insert		1
29	JTSS1600-G29	Allen Screw	M8x25	1
30	JTSS1600-G30	Upper, Support		1
31	JTSS1600-G31	Taping Screw	ST4.2x12	1
32	JTSS1600-G32	Washer	4mm	1
33	JTSS1600-G33	Right End Cap, Front Rail		1
34	JTSS1600-G34	T- Nut	M5	1
35	JTSS1600-G35	Rack, Fence		1
37	JTSS1600-G37	Lock Washer	5mm	1
38	JTSS1600-G38	Pan Head Screw	M5x8	1
39	JTSS1600-G39	Left End Cap, Front Rail		1
40	JTSS1600-G40	Scale, Rail		1
41	JTSS1600-G41	Rear Rail		1

Parts Breakdown for JTSS-1600 Panel Saw --------Part H

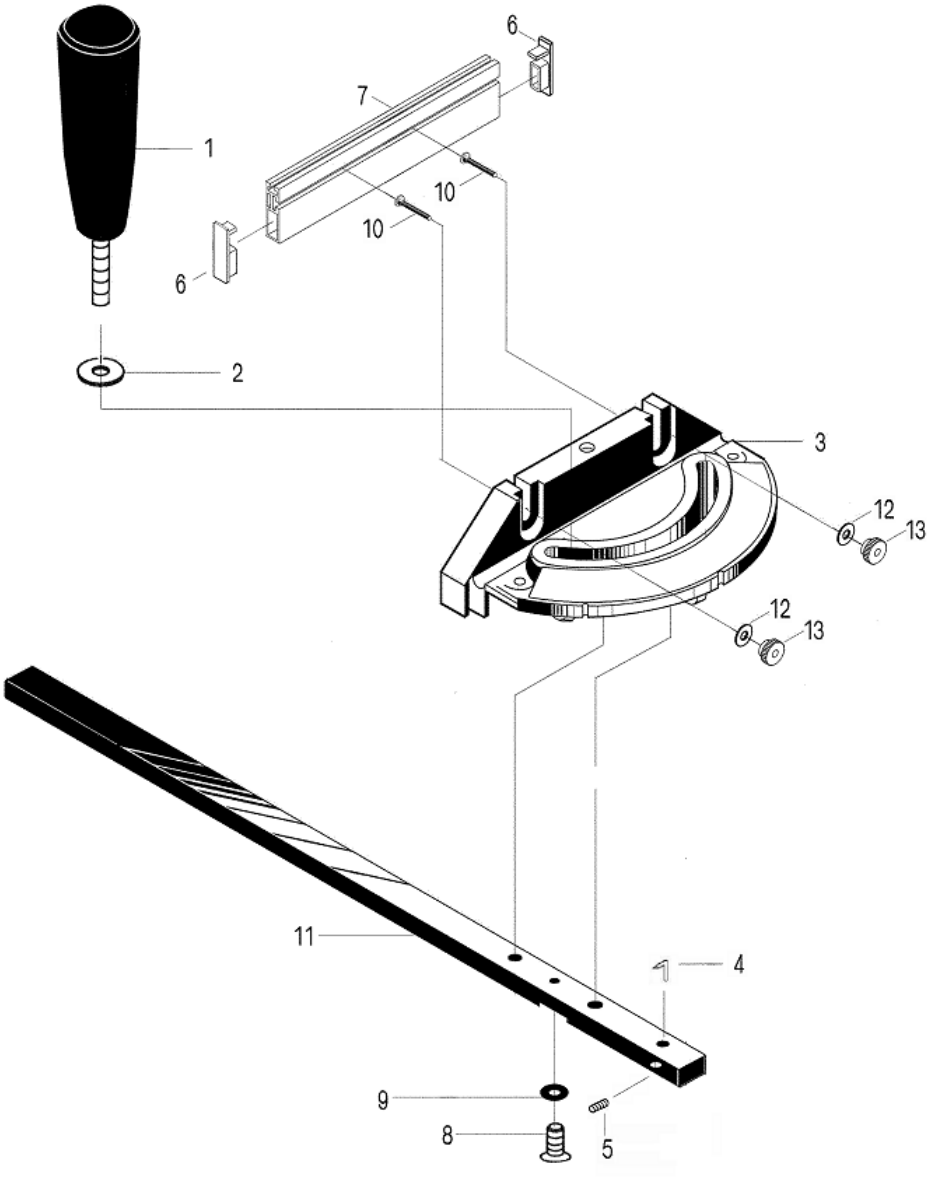

Parts List for JTSS-1600 Panel Saw ----- Part H

Index No.	Part No.	Description	Size	Qty.
1	JTSS1600-H01	Mitre Gauge Knob		1
2	JTSS1600-H02	Washer	6mm	1
3	JTSS1600-H03	Mitre Gauge Base		1
4	JTSS1600-H04	Indicator		1
5	JTSS1600-H05	Screw		1
6	JTSS1600-H06	End Cap, Gauge Fence		2
7	JTSS1600-H07	Gauge Fence		1
8	JTSS1600-H08	Sunk Head Screw	M5x8	1
9	JTSS1600-H09	Roller, Gauge		1
10	JTSS1600-H10	Carriage Bolt	M6x32	2
11	JTSS1600-H11	Miter Gauge Rod		1
12	JTSS1600-H12	Washer	6mm	2
13	JTSS1600-H13	Knurled Nut		2

Wiring Diagram for JTSS-1600 Panel Saw

10000044T…….….. 3 ~ 400V, 50Hz

3~400V, 50Hz

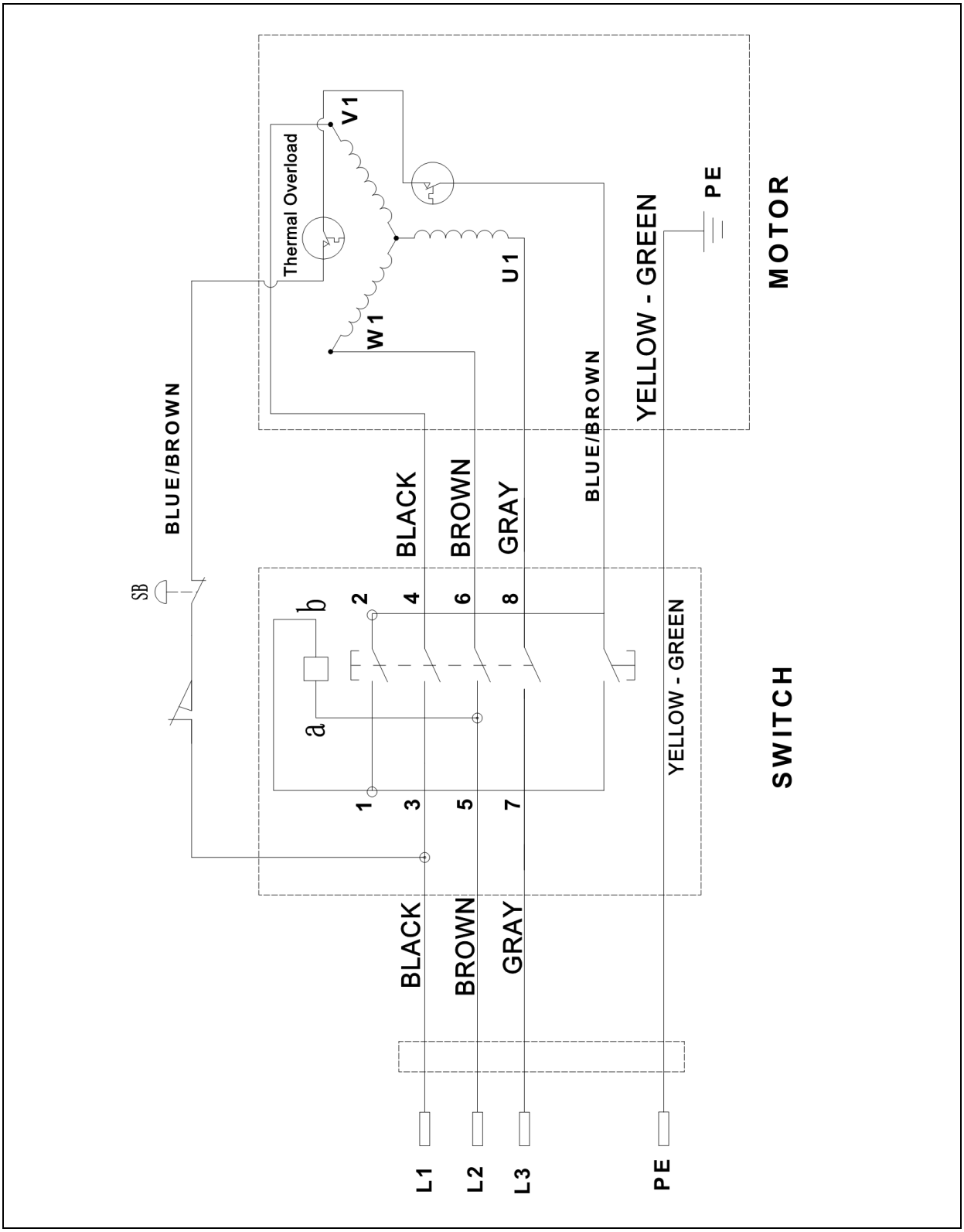

Wiring Diagram for JTSS-1600 Table Saw

10000044M…….….. ~ 230V, 50Hz
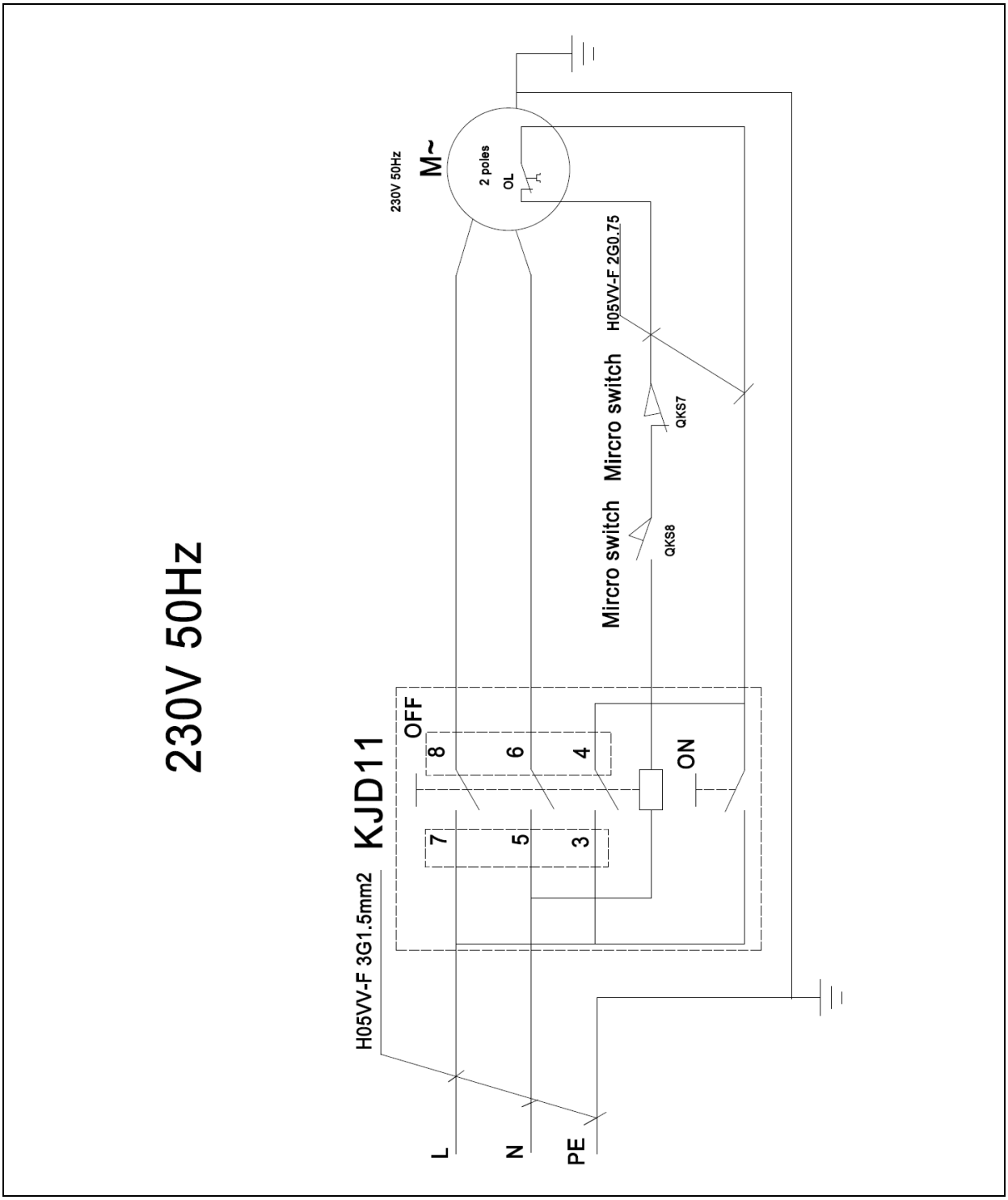
~230V, 50Hz