JTSS-1600

Panel Saw

Original:

GB
Operating Instructions

TOOL FRANCE SARL

9 Rue des Pyrénées,91090 LISSES, France

www.jettools.com

M-10000044 M/T 2019-03

CE-Conformity Declaration
CE-Konformitätserklärung
Déclaration de Conformité CE

Product / Produkt / Produit:

Panel saw / Formatkreissäge / scie circulaire à format

JTSS-1600
10000044M / 10000044T

Brand / Marke / Marque:

JET

Manufacturer / Hersteller / Fabricant:

TOOL FRANCE SARL
9 Rue des Pyrénées,91090 LISSES, France

We hereby declare that this product complies with the regulations
Wir erklären hiermit, dass dieses Produkt der folgenden Richtlinie entspricht
Par la présente, nous déclarons que ce produit correspond aux directives suivantes

2006/42/EC
Machinery Directive / Maschinenrichtlinie / Directive Machines

2014/30/EU
Electromagnetic Compatibility / Elektromagnetische Verträglichkeit / compatibilité électromagnétique
2011/65/EU
RoHS directive / RoHS-Richtlinie / Directive RoHS

designed in consideration of the standards
und entspechend folgender zusätzlicher Normen entwickelt wurde
et été développé dans le respect des normes complémentaires suivantes

EN ISO 12100:2010
EN ISO 19085-1:2017 / EN ISO 19085-5:2017
EN 60204-1:2006+A1:2009
EN 55014-1:2006+A1+A2 / EN 55014-2: 1997+A1+A2
EN 61000-3-2 :2006+A1+A2 / EN 61000-3-3/2008

Responsible for the Documentation / Dokumentations-Verantwortung / Résponsabilité de Documentation:

Head Product-Mgmt. / Leiter Produkt-Mgmt. / Resp. Gestion des Produits

TOOL FRANCE SARL

2019-02-20 Christophe SAINT SULPICE, General Manager

TOOL FRANCE SARL
9 Rue des Pyrénées,91090 LISSES, France

GB - ENGLISH

Operating Instructions

Dear Customer,

Many thanks for the confidence you have shown in us with the purchase of your new JET-machine. This manual has been prepared for the owner and operators of a JET JTSS-1600 **Panel Saw** to promote safety during installation, operation and maintenance procedures. Please read and understand the information contained in these operating instructions and the accompanying documents. To obtain maximum life and efficiency from your machine, and to use the machine safely, read this manual thoroughly and follow instructions carefully.

…Table of Contents

1. Declaration of conformity

On our own responsibility we hereby declare that this product complies with the regulations listed on page 2.

2. Warranty

TOOL FRANCE SARL guarantees that the supplied product is free from material defects and manufacturing faults.
This warranty does not cover any defects which are caused, either directly or indirectly, by incorrect use, carelessness, accidental damage, repair, inadequate maintenance or cleaning and normal wear and tear.

Any warranty details (i.e. warranty period) can be found in the General Terms and Conditions (GTC) that are integral part of the contract.
These GTC can be viewed at the website of your dealer or sent to you upon request.
TOOL FRANCE SARL reserves the right to make changes to the product and accessories at any time.

3. Safety

3.1 Authorized use

This machine is designed for sawing wood, wood derived materials as well as similar to be machined hard plastics only. Machining of other materials is not permitted and may be carried out in specific cases only after consulting with the manufacturer.

No metal workpieces may be machined.

The workpiece must allow to safely be loaded, supported and guided.

No cuts without using the rip fence, the 90° fence or the sliding table may be performed.

No submerged cuts by removing the riving knife and/or saw guard may be performed.

The use of a power feeder is not considered.

The proper use also includes compliance with the operating and maintenance instructions given in this manual.

The machine must be operated only by persons familiar with its operation, maintenance and repair and who are familiar with its hazards.

The required minimum age must be observed.

The machine must only be used in a technically perfect condition.

When working on the machine, all safety mechanisms and covers must be mounted.

In addition to the safety requirements contained in this operating instruction and your country's applicable regulations, you should observe the generally recognized technical rules concerning the operation of woodworking machines.

Any other use exceeds authorization. In the event of unauthorized use of the machine, the manufacturer renounces all liability and the responsibility is transferred exclusively to the operator.

3.2 General safety notes

Woodworking machines can be dangerous if not used properly. Therefore the appropriate general technical rules as well as the following notes must be observed.

Read and understand the entire instruction manual before attempting assembly or operation.

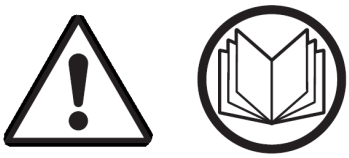

Keep this operating instruction close by the machine, protected from dirt and humidity, and pass it over to the new owner if you part with the tool.

No changes to the machine may be made.

Daily inspect the function and existence of the safety appliances before you start the machine.
Do not attempt operation in this case, protect the machine by unplugging the mains cord.

Do **not** wear gloves while operating this machine.
Remove all loose clothing and confine long hair.

Before operating the machine, remove tie, rings, watches, other jewellery, and roll up sleeves above the elbows.

Wear safety shoes; never wear leisure shoes or sandals.

Always wear the approved working outfit:

- safety goggles
- ear protection
- dust protection

For the safe handling of sawblades wear work gloves.

Observe the chapter “save operation” in this manual.

Check the correct rotation of the sawblade before operating the machine.

Do not start cutting operation until sawblade is at full speed.

Control the stopping time of the machine, it may not be longer than 10 seconds.

Do not use side pressure to stop rotating blade.

Insure that the work piece does not roll when cutting round pieces.

Use suitable table extensions and supporting aids for difficult to handle workpieces.

Always hold and guide the workpieces safely during machining.

The fence must securely be locked before machine use.

Pay particular attention to instructions on reducing the risk of kickback.

The supplied raving knife must always be used. Adjust the space to the sawblade to be between 2 to 5mm.

Do not perform any operation for which the tool has not been designed for, e.g. do not use this table saw to cut logs or firewood.

Do not perform any operation freehand.

Never reach around or over the saw blade.

When ripping narrow workpieces (smaller than 120mm) use as push-stick or push-wood.

Push stick or push wood must stay with the machine when tool is stored and not in use.

Always use crosscut fence or mitre gauge for cutting off.

The use of dado-blades and groove cutters is not permissible.

Make sure that small cut off workpieces will not be caught and thrown away by the rising saw blade teeth.

Remove cut and jammed workpieces only when motor is turned off and the machine is at a complete standstill.

Install the machine so that there is sufficient space for safe operation and work piece handling.

Keep the inside of the cabinet clear of sawdust and wood chips. Make sure the motor fan and fan cover are kept clear of sawdust.

Keep work area well lighted.

The machine is designed to operate in closed rooms and must be placed stable on firm and levelled ground.

Make sure that the power cord does not impede work and cause people to trip.

Never use the power cord to carry the tool.
Do not expose the power cord to heat, oil or any sharp corners.
Do not pull the cord to unplug.

Keep the floor around the machine clean and free of scrap material, oil and grease.

Stay alert!
Give your work undivided attention. Use common sense.

Keep an ergonomic body position.
Maintain a balanced stance at all times.

Pull the mains plug if the tool is not in use.

Pull the mains plug prior to any maintenance or change of accessory (e.g. sawblade).

Before starting the machine make sure that operating and measuring tools are removed from the machine.

Do not operate the machine when you are tired.
Do not operate the machine under the influence of drugs, alcohol or any medication. Be aware that medication can change your behaviour.

Keep children and visitors a safe distance from the work area.

Never reach into the machine while it is operating or running down.

Never leave a running machine unattended. Before you leave the workplace switch off the machine.

Do not operate the electric tool near inflammable liquids or gases.
Observe the fire fighting and fire alert options, for example the fire extinguisher operation and place.

Do not use the machine in a dump environment and do not expose it to rain.

Wood dust is explosive and can also represent a risk to health.
Dust form some tropical woods in particular, and from hardwoods like beach and oak, is classified as a carcinogenic substance.
Always use a suitable dust extraction device

Before machining, remove any nails and other foreign bodies from the work piece.

Specifications regarding the maximum or minimum size of the work piece must be observed.

Cut thin or thin-walled work-piece only with fine-toothed saw blades.

Never cut several work-pieces at the same time – and also no bundles containing several individual pieces. Risk of personal injury if individual pieces are caught by the saw blade uncontrolled.

When cutting round stock, use a suitable jig to prevent the work-piece from turning.

Never cut work-pieces containing the following materials:
-Ropes, strings, cords, cables and wires.

Do not force the power tool. It will do a better and safer job and give you much better service if it is used at the rate for which it was designed.

Do not remove chips and work piece parts until the machine is at a complete standstill.

Never operate with the guards not in place – serious risk of injury!

Do not stand on the machine.

Connection and repair work on the electrical installation may be carried out by a qualified electrician only.

Always unwind any extension cords fully.

Have a damaged or worn cord replaced immediately.

Do not use the machine when the ON-OFF switch does not operate correctly.

The use of accessories other than those recommended in this manual can create a safety hazard.

Make all machine adjustments or maintenance with the machine unplugged from the power source.


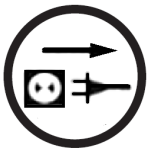

When installing a new sawblade make sure that it matches the raving knife.
The raving knife thickness must be in between sawblade body thickness and width of cut.

Make sure that the sawblade is suitable for the work piece material to be cut.

Use only sawblades according to EN 847-1
Never use sawblades made from High Speed Steel (HSS).

Remove defective sawblades immediately.

A worn table insert must be replaced.

3.3 Remaining hazards

When using the machine according to regulations some remaining hazards may still exist

The moving sawblade in the work area can cause injury.

Broken saw blades can cause injuries.

Thrown workpieces can lead to injury.

Tipping of the workpiece due to insufficient support can lead to injury.

Wood chips and sawdust can be health hazards. Be sure to wear personal protection gear such as safety goggles ear- and dust protection.

Use a suitable dust exhaust system.

The use of incorrect mains supply or a damaged power cord can lead to injuries caused by electricity.

The type and condition of the sawblade is important in keeping the noise level as low as possible.

This does not negate the fact that extra safety equipment such as ear protection must be used.

4. Machine specifications

4.1 Technical data

Machine Table	800x385 mm
Rear extension table	310x500mm
Right extension table	800x400mm
Sliding table size	1600x270mm
Max. travel of sliding table	1600mm
Max. length of cut	1350mm
Crosscut table	680 x 580mm
Cross Cut Fence	1200 (2200)mm
Sawblade diameter	Ø250 - 315 mm
Blade bore diameter	Ø30 mm
Blade speed no	4700 rpm
Scoring blade diameter	Ø90mm
Scoring blade bore diameter	Ø20mm
Scoring blade speed no	8700 rpm
Cutting height at 90°/45°	100 / 80 mm
Tilting range of blade	90°- 45°
Max Distance-blade to rip fence	1220mm
Dust port diameter	100mm
Weight	250 kg
Mains	~230V PE 50Hz
Motor output power	P2=2.4 kW S1
Reference current	15.80 A
Extension cord (H07RN-F)	3x2,5mm²
Installation fuse protection	16A
Mains	400V ~3/PE 50Hz
Motor output power	P2=3.0 kW S1
Reference current	6.6 A
Extension cord (H07RN-F)	4x1,5mm²
Installation fuse protection	16A

4.2 Noise emission

Determined according to EN 1870-18
(Inspection tolerance 4 dB)

Workpiece plywood 16mm:

Acoustic power level (according to EN ISO 3746):

Idling	LwA	98,3 dB (A)
Operating	LwA	104 dB (A)

Acoustic pressure level (according to EN ISO 11202):

Idling	LpA	84,4 dB (A)
Operating	LpA	90,2 dB (A)

The specified values are emission levels and are not necessarily to be seen as safe operating levels.

Although there is a correlation between emission and exposure levels, this cannot be used reliably to determine whether or not further precautions are required.

Factors that influence the actual level of exposure of the workforce include the characteristics of the work room, other sources of noise, the number of machines or other adjacent processes.

The permissible exposure level can vary from country to country.

This information is intended to allow the user to make a better estimation of the hazards and risks involved.

4.3 Dust emission

The circular saw has been dust emission inspected.

At an air velocity of 20m/sec on the dust port dia 100mm:

Vacuum pressure	800Pa
Volume flow	565 m³/h

The TRK-value of 2 mg/m^3 is not exceeded.

4.4 Content of delivery

Main crate

Main saw unit
Cast iron extension table
Steel plate extension table w/support leg
Rear extension table w/support
Swing arm assembly (inside main saw unit)
Cross cut table
Roller, cross cut
Blade guard
2-1/2" dust hose
Dust port
Mitre gauge
Hand wheels (2)
Hardwares

Tools

-13-15 mm open head wrench
- Arbor wrench
- Arbor pin
- 3, 4, 5, 6 mm "L" wrench

Push stick
(Some parts are inside the main saw unit)
Edge shoe

Rail crate

Rip fence
Rip fence rail
Rear support rail
Sliding table
Sliding table carrier
Support legs for sliding table (2)
Cross cut fence
Hold down w/fence
Flip stop

4.5 Description of machine

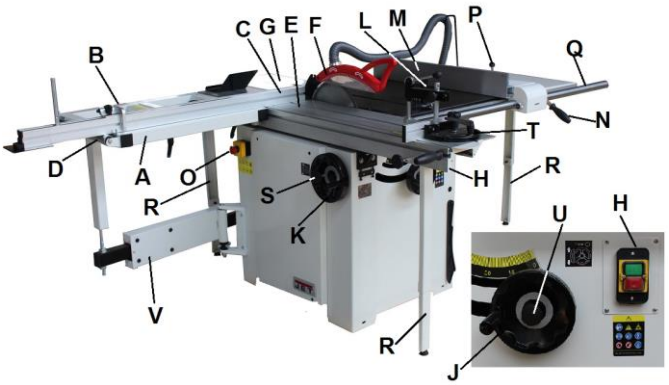

Fig1

A…...Crosscut Table
B…..Flip Stops
C…..Crosscut Fence
D…..Roller
E…..Sliding Table
F…..Blade Guard
G…..Rear extension table
H…..ON/OFF Switch
J…...Blade Elevation Hand-wheel
K……Blade Tilt Hand-wheel
L……Mitre Gauge
M……Rip Fence
N……Fence Assembly Lock Down lever
O……E-stop button
P……Fence profile lock lever
Q……Rip Fence Rail
R……Support Leg
S……Blade Tilt Lock Knob
T…… Hold Down w/Mitre Gauge
U…… Blade Elevation Lock Knob
V…… Sliding Table base

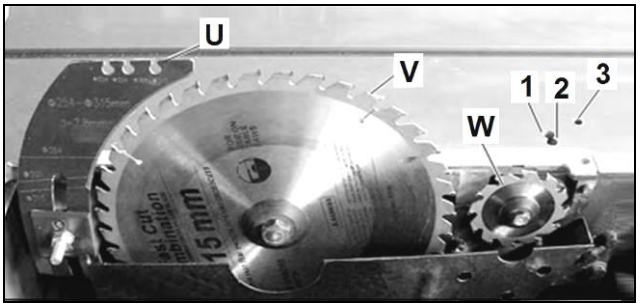

Fig 2

U…… Riving Knife
V…… Main Blade
W……Scoring Blade
1…... Scoring Blade Alignment Screw
2…… Scoring Blade Lock Screw
3…… Scoring Blade Elevation Screw

5. Transport and start up

5.1 Transport and installation

The machine will be delivered on a crate.

Attention:

Do not remove the motor transport lock before the machine has been set in place.

Do not operate the handwheels.

Use a forklift or lifting straps to lift the machine off the pallet (Fig 3).

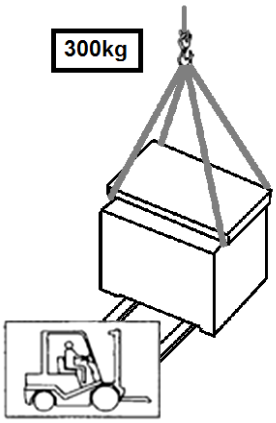

Fig 3

Warning:

The machine weight is heavy.

Assure the sufficient load capacity and proper condition of your lifting devices.

Never step underneath suspended loads.

For transport to the desired location use a forklift or hand trolley. Make sure the machine does not tip or fall off during transport.

The machine is designed to operate in closed rooms and must be placed stable on firm and levelled ground.

To avoid machine tiping and for static stability, the table support legs must always be installed and adjusted to the floor.

The machine must be levelled in both directions to assure good sliding motion of the sliding table.

If possible, the machine must be placed on rubber plates which act as shock absorbers and reduce the noise level.

There must be suffient space to operate the machine

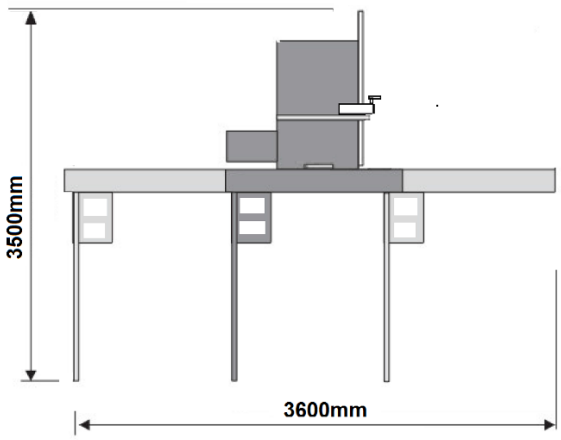

Fig 4

For packing reasons the machine is not completely assembled.

5.2 Assembly

If you notice any transport damage while unpacking, notify your supplier immediately. Do not operate the machine!

Dispose of the packing in an environmentally friendly manner.

Clean all rust protected surfaces with a mild solvent.

Some machine components are heavy. Get help from a second person.

Mounting Rear Extension Table

Attach rear extension table to the machine table and put surfaces in level with help of screws (U, Fig 5).

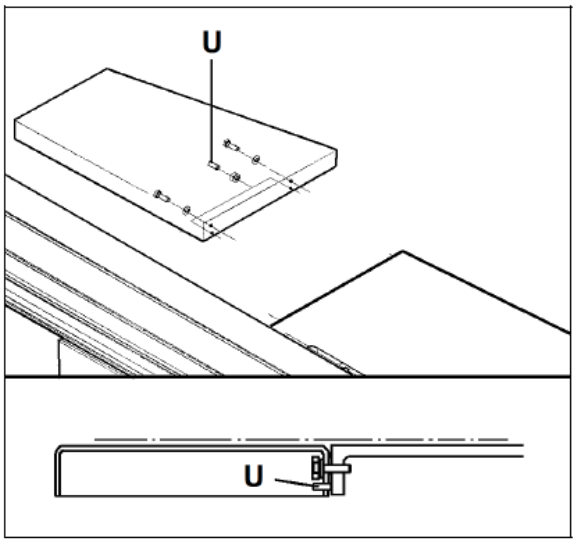

Fig 5

Attach the diagonal support beam (Fig 6).

Fig 6

Mounting Right Extension Table Attach right extension table to the machine table and put surfaces in level. Fig 7

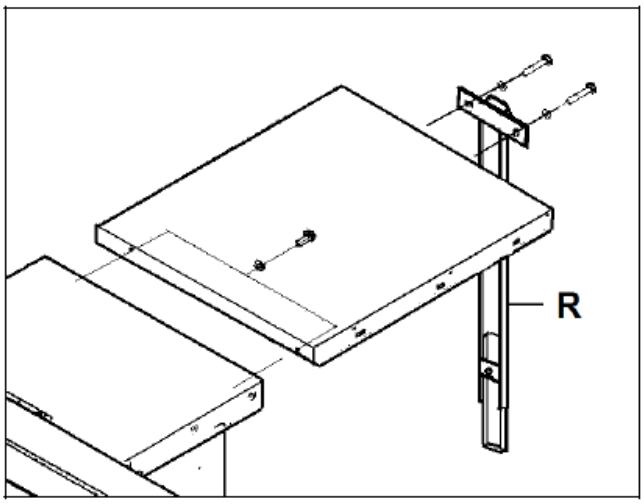

Fig 7

The right table extension has an adjustable support leg (V).

Info:

Table alignment can be achieved quickly, by tapping it with a block of wood Fig 8.

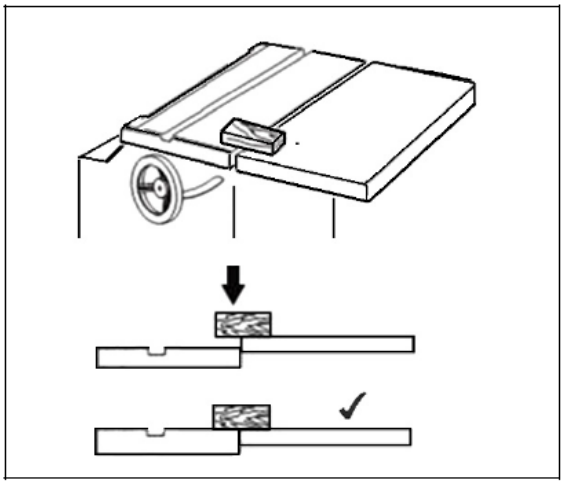

Fig 8

Check that table surfaces and edges are aligned, then firmly tighten the screws.

Mounting rip fence rail
Insert four M10x80 hex head bolts into rip fence base rail (Q, Fig 9).
Loosely attach two M10 hex nuts with washer in between for each bolt.
Mount the rip fence base rail to the front of the saw table and right table extension with M10 hex nuts.
First tighten nuts on two external bolts, aligning the rail parallel with the table, then tighten the other nuts.

Insert the scale carrier (I) and attach with nuts and washers.

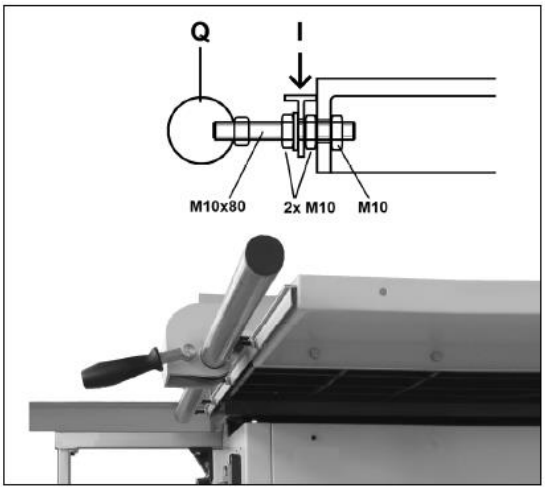

Fig 9

Mounting rip fence

Mount the rip fence to the rip fence base rail. Fig 10

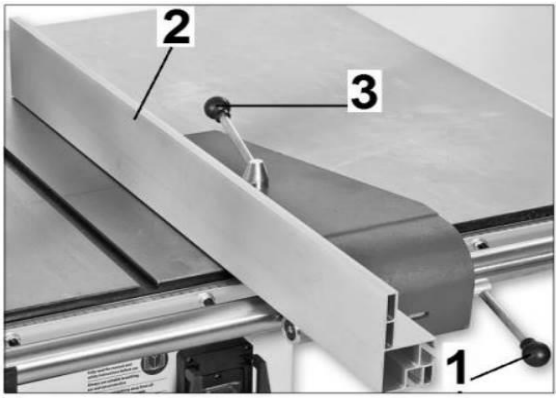

Fig 10

Mounting the main blade elevation & angle handwheel

Fitting the elevation handwheel(1 Fig 11) and angle handwheel (2) onto the elevation and angle shaft.

Screw the blade lock knob(3) onto the elevation Handwheel.

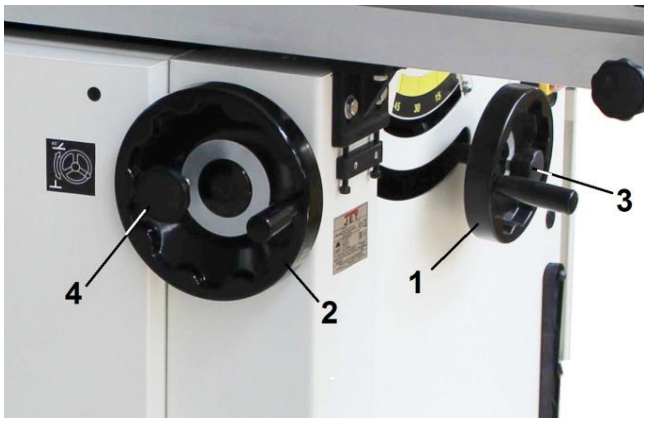

Fig 11

Mounting the sliding table:

Fig 12-1

Lift the sliding table onto the machine and attach with T-bolts and nuts .

Sliding table adjustment:
The sliding table is adjusted ex works.
The sliding table must be aligned to run parallel to the sawblade.
The table surface must be approximately 0,1 - 0,4 mm higher than the machine table (Fig 12-2).

Loosen the bolts (A) and adjust with screws (B).

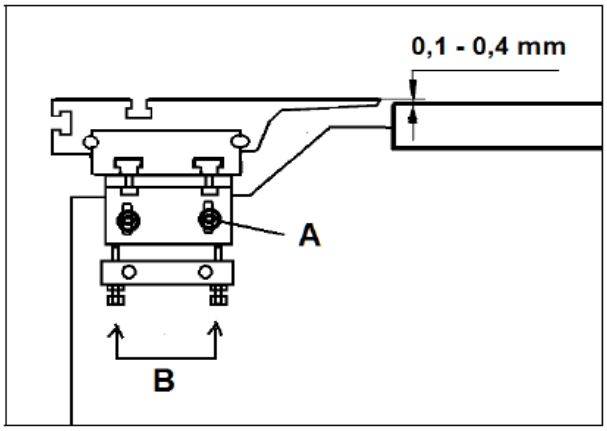

Fig.12-2

Mounting the sliding table support legs (2x):

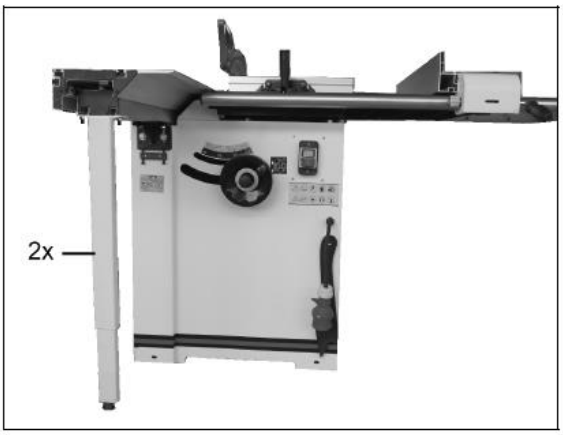

Fig 13

Mounting the telescopic swing arm

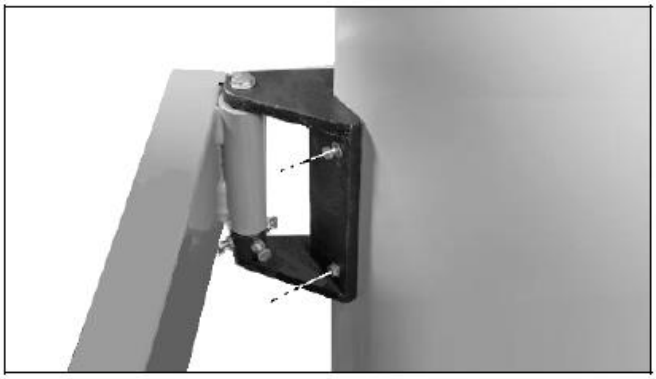

Fig 14

Mounting Cross cut Table

Place the crosscut table (A, Fig 15) onto telescopic arm support rod (B).

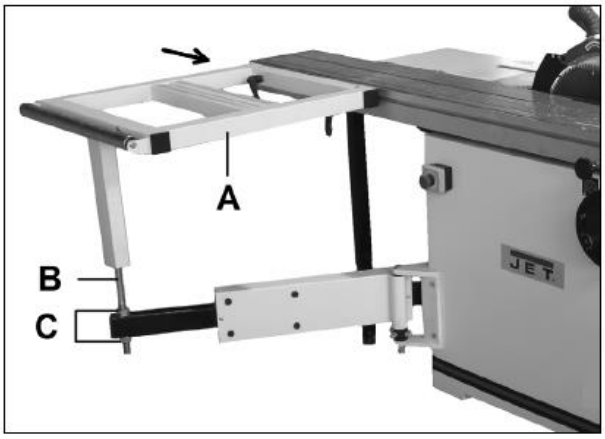

Fig 15

Slide two M8x70 carriage bolts with T-blocks into the T-slot of the sliding table, attach with 2 wing nuts.

Adjust 4-M12 hex nuts (C) to bring the cross cut table into same plane with sliding table and machine table.

Move the sliding table and check plane again.

Note:
In case the crosscut table changed in height, this must be eliminated on the swing arm rotate axis. Fig 16.

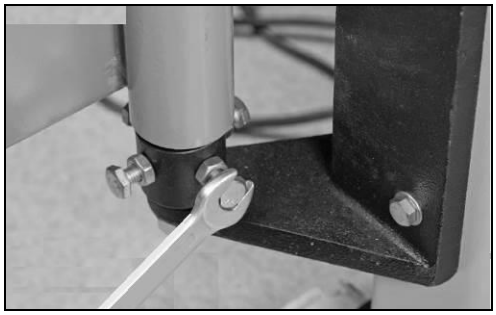

Fig 16

Mounting Cross cut Fence

Drop the cross cut fence into the forward or rear guide pin hole.

Tighten the knurled nut.

Attach with T-bolt and locking handle (G).

Turn the "Z" lock plate (F) to quick aligning the fence to table.

Turn the star type screw and clamped the fence in position.

Slide the flip stop (D) into the fence.

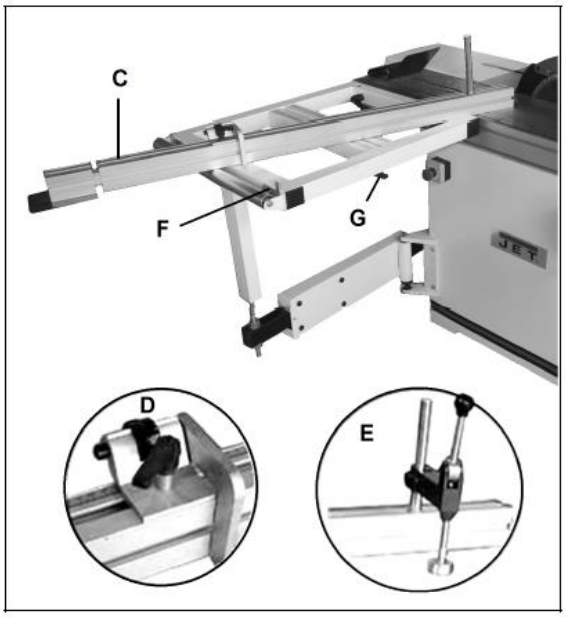

Fig 17

Place a T-nut into the top slot of fence, thread the stud of holddown on fence.

If needed, put the hold down arm onto the stud (E).

Reference to chapter 7.8

Mounting Mitre Fence

See chapter 7.9

Mounting Sawblade

See chapter 7.1

Mounting sawguard

The riving knife has slots for different blade sizes Fig 18

Min blade size Ø 250mm, max blade size Ø315mm

Reference to chapter 7.3

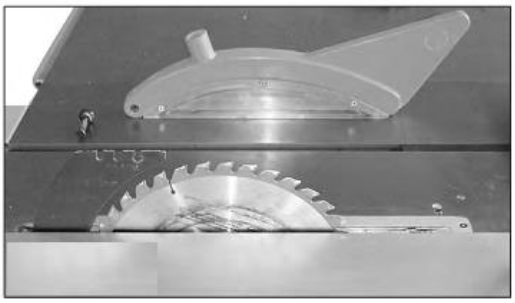

Fig18

5.3 Dust connection

Install the 2" dust hose onto the blade guard with 2" hose clamp. Fig19

Put the 2" dust hose onto dust hose support, keep free with the working table.

Another end of 2" dust hose clamps to the main dust port on the bottom of rear panel.

Install 4" dust hose to main dust port with 4" hose clamp.

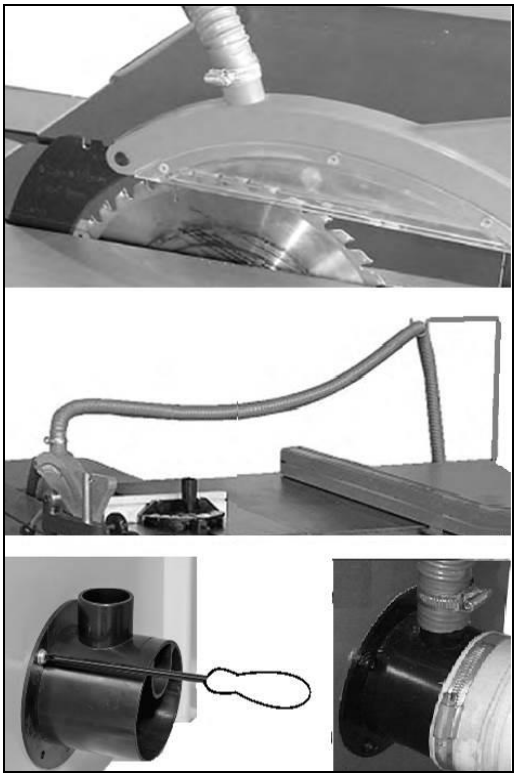

Fig 19

Before initial operation, the machine must be connected to a dust extractor.

The suction should switch on automatically when the saw is switched on.

A hose, a Y-piece and a hose support are supplied with the machine.

The flow rate on the suction port dia 100mm must be 20m/sec.

Flexible hoses must be of nonflammable quality, and must be connected to the machine ground system.

5.4 Mains connection

Mains connection and any extension cords and plugs used must comply with the information on the machine licence plate.

The mains connection must have a 16A surge-proof fuse.

Only use connection cables marked H07RN-F, with wires 1,5mm^2 or more.

Power cords and plugs must be free from defects.

Connections and repairs to the electrical equipment may only be carried out by qualified electricians.

The machine is equipped with a 16Amp CCE Euro plug, mounted at the back side of the frame.

Attention:

-Check first if the saw spindle runs freely and if all safety devices are fitted before starting the machine.

- If the direction of rotation is not correct, the phase converter inside the CCE Euro plug must be pushed in and turned 180°.

(Clockwise direction of the main spindle is correct).

For safety reasons this must only be done without the sawblade installed!

5.5 Starting operation

You can start the machine with the green On-button. The red OFF-button stops the machine. (H, Fig 20-1).

The scoring sawblade is started and stopped simultaneously with the main sawblade.

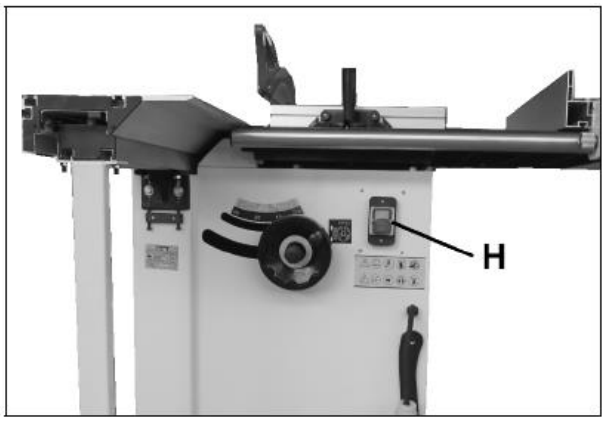

Fig 20-1

Note:

-When the lower sawblade cover is open, it is impossible to start up the machine.

-In case of machine overload the motor overload cut-off will react. After appr.10 min of cooling the machine can be started again.

Emergency stop:

Press E-stop button (O, Fig 20-2) to shut down all machine operations.

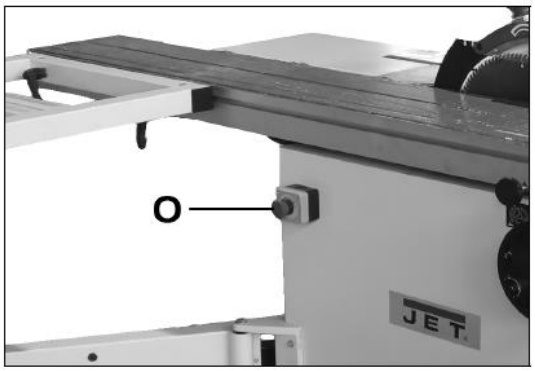

Fig. 20-2

Note:

The E-stop remains engaged until it is rotated clockwise for release

6. Machine operation

Correct working position:

In front of the machine standing out of the line of cutting (danger zone) Fig 21.

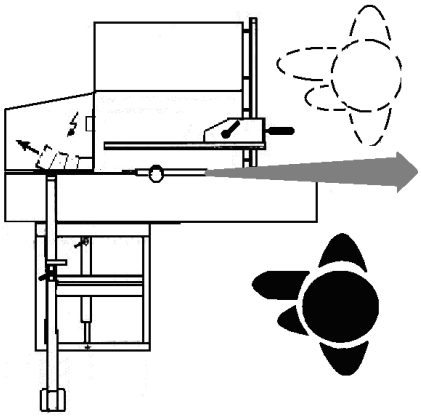

Fig 21

Work piece handling:

Hands placed flat on the work piece outside the cutting area.

Feed the work piece towards the saw blade in the direction of the saw line. Push the work piece steadily forward; complete the cut as a single movement.

Support long and wide workpieces with helping roller stands.

The use of a power feeder is not considered.

Crosscut with crosscut fence (Fig 22-1).

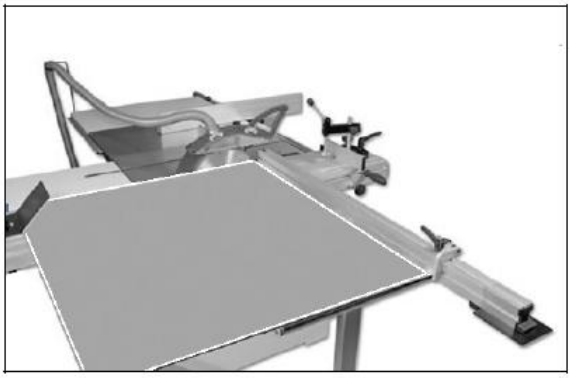

Fig.22-1

Trimming with back stop (Fig 22-2).

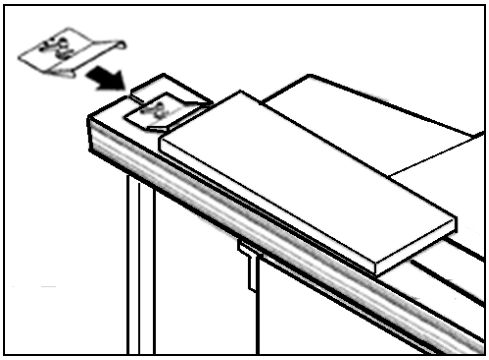

Fig 22-2

Crosscut with rip fence (Fig 22-3).

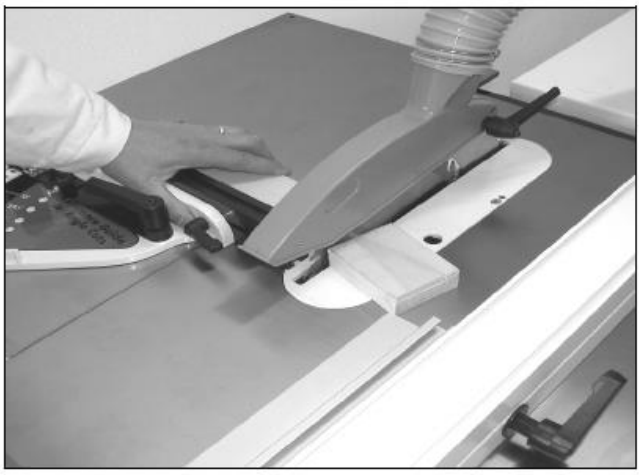

Fig 22-3

Ripping of narrow stock (Fig 22-4).

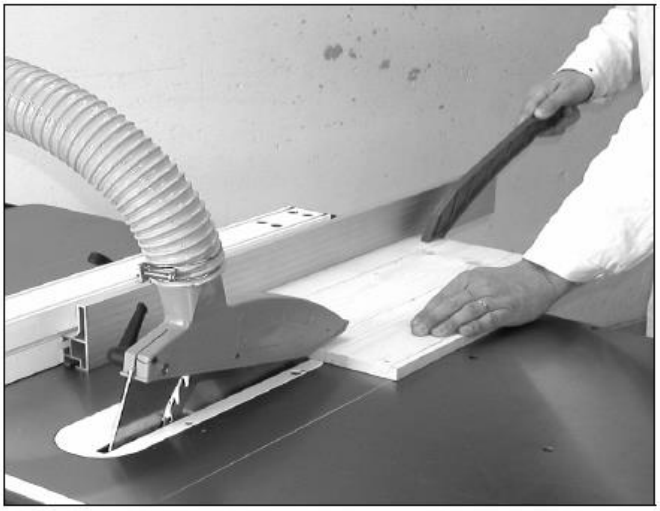

Fig 22-4

Use of push wood with handle (Fig 22-5).

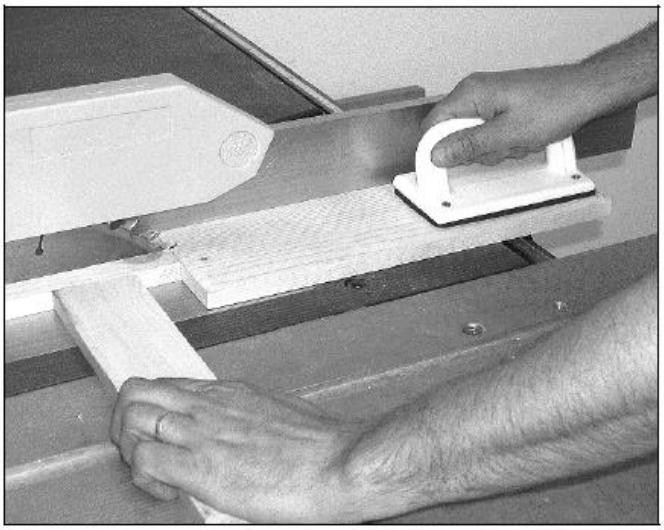

Fig 22-5

Operating hints:

Work only with a sharp and flawless sawblade.

Take care that the selection of the saw blade depends on the material to be cut.

Use a suitable wedge to prevent round timber from turning under the pressure of the cut.

Use suitable table extensions and supporting aids for difficult to handle workpieces.

Always hold and guide the workpieces safely during machining.

The fence must securely be locked before machine use.

Do not perform any operation freehand.
Guide and push the workpiece against the fence.

Take care when slotting.

When ripping narrow workpieces (<120mm) use as push-stick or push wood.

Push sticks and push woods shall be made from plastic, wood or plywood.

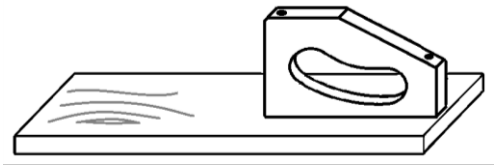

Push sticks must have a minimum length of 400mm and a V-mouth.

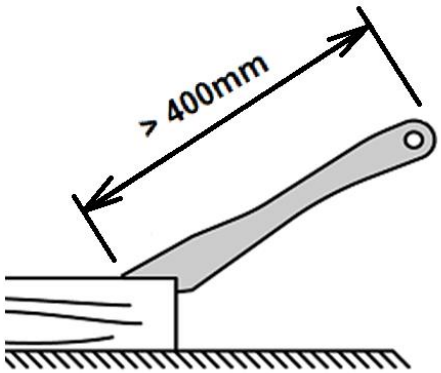

To cut wedges, a special push wood must be used.

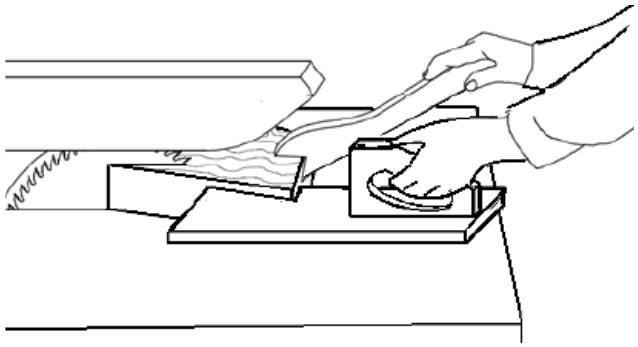

Make sure that small cut off workpieces will not be caught and thrown away by the rising saw blade teeth.

Remove cut and jammed workpieces only when motor is turned off and the machine is at a complete standstill.

Pay particular attention on reducing the risk of kickback.

The supplied raving knive must always be used.

For the authorized use of the machine observe the appendix A “safe operation“

(on the last pages of this operating manual)

A.1.: Ripping

A.2.: Ripping of narrow stock

A.3.: Crosscutting on rip fence

A.4.: Use of push wood handle

7. Setup and adjustments

General note:

Setup and adjustment work may only be carried out after the machine is protected against accidental starting by pulling the mains plug.

7.1 Changing sawblade

The sawblade has to meet the technical specification.

Use only sawblades according to EN 847-1

The minimum diameter of the saw blades used on the machine is 250mm.

The maximum diameter of the saw blades used on the machine is 315mm.

Check sawblade for flaws (cracks, broken teeth, bending) before installation. Do not use faulty sawblades.

Warning:

The use off HSS saw blades is prohibited; use only carbide tipped saw blades.

The sawblade teeth must point in cutting direction (down)

Always wear suitable gloves when handling sawblades.

WARNING:

When installing or changing saw blade, always disconnect saw from power source, unplug!

Push the sliding table to the front and open the lower sawblade cover.

Raise the main sawblade to its highest position.

Remove the saw guard.

Changing main saw blade:

Loosen the arbor nut (J, Fig 23) while stopping the arbor against rotation with the locking pin (K).

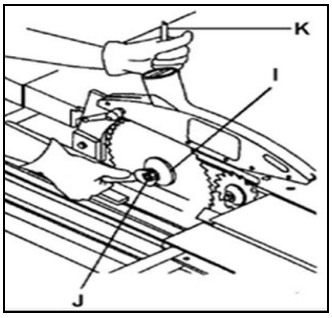

Fig 23

Attention: left hand thread.

Remove the arbor nut (J) and flange (I).

Place saw blade on arbor shaft making sure teeth point down at the front of the saw.

Reinstall flange and arbor nut and securely tighten.

Remove the locking pin (K).

Check the correct position of the raving knife in regards to the saw blade (see Chapter 7.2).

Reinstall the saw guard.

The scoring sawblade is changed as follows:

Put the enclosed spanner onto the saw arbor nut (M, Fig 24)

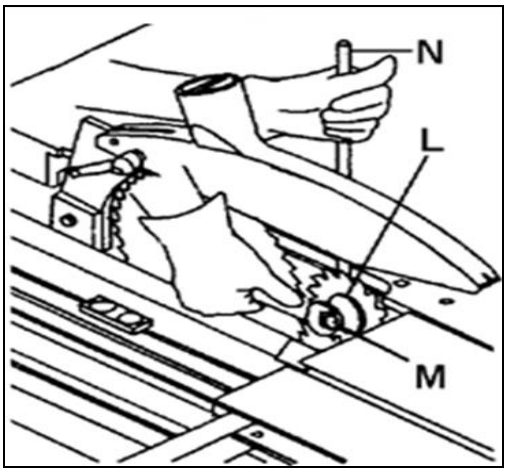

Fig 24

Put the locking pin (N) in the opening

of the saw table and turn the arbor with the spanner until the locking pin engages in the hole in the saw arbor pulley.

Now unlock the nut.

Change the scoring blade.

After changing the blade tighten the bolt.

7.2 Mounting the raving knife

The supplied raving knife must always be used.

The machine is equipped with a raving knife for the use of sawblades diameter 250 to 315 mm.

The raving knife has to be adjusted in such a way that over its entire length the gap between sawblade and raving knife does not exceed min.3 mm and max.8 mm. (Fig 25).

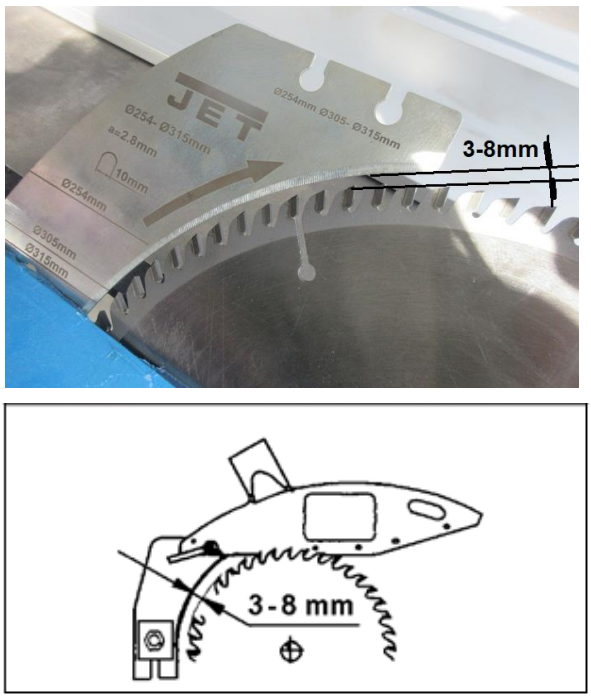

Fig 25

The raving knife (P, Fig 26) can be adjusted in both vertical and horizontal direction.

The height setting has to be adjusted in such a way that the sawguard bottom never exceeds more than 3 mm above the highest placed sawblade tooth.

After height adjustment always locks the central bolt (Q).

The raving knive is side adjusted ex works.

The 4 little adjustment screws are used for the exact setting of the raving knife in line with the sawblade.

For slotting or grooving a special raving knife is needed.

The raving knife has to be adjusted in such a way that the upper part of the raving knife is never set lower than the highest sawtooth in use.

Never remove this raving knife.

Kickbacks are severe and very dangerous.

No submerged cuts by removing the raving knife and/or saw guard may be performed.

7.3 Mounting the saw guard

The sawguard (G, Fig 26) must always be used.

Attach the saw guard to the raving knife (P), in the slot (S) matching the sawblade diamenter.

The sawguard must be lowered to the workpiece to minimise the amount of exposed teeth.

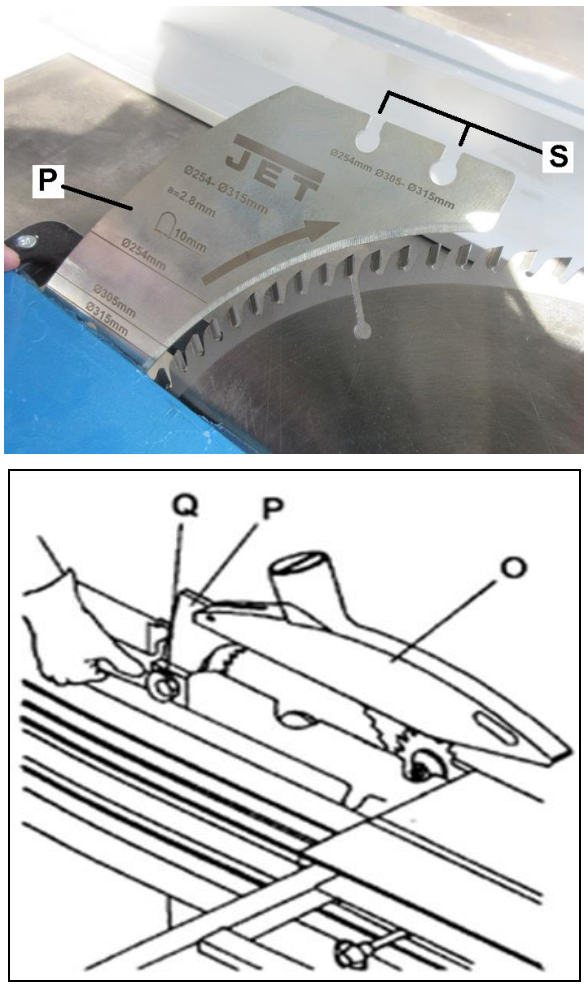

Fig 26

Adjustment shall never be performed when the machine is running.

The saw guard has to be connected to the dust extractor system.

7.4 Rising and tilting sawblade

Setup adjustments of the sawblade shall never be performed when the machine is running.

Use the front handwheels to raise the sawblade (1, Fig 27).

One turn of the handwheel equals 7.5 mm of height setting.

Loosen the lock knob (3) to adjust.

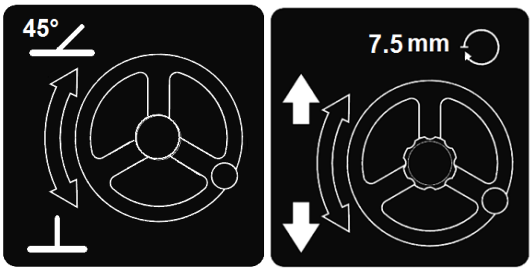

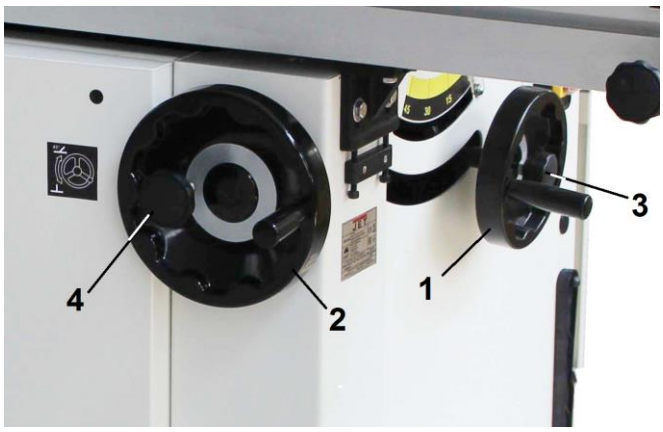

Fig 27

Use the left handwheel to tilt the sawblade (2).

Both 45° and 90° positive stops are factory set.
In case, they are adjustable, loosen the grub screw and reposition the stop collar (Fig 28).

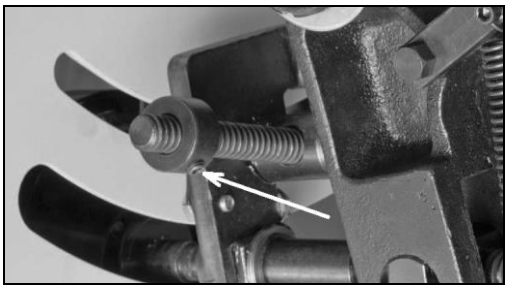

Fig 28

After any adjustment, start the machine with care.

7.5 Setup of scoring sawblade

The height setting of the scorer sawblade is done by turning the screw (T, Fig 29)

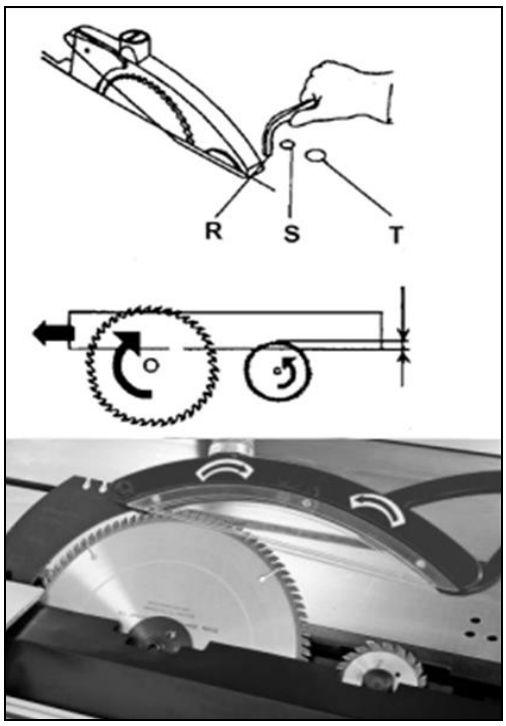

Fig 29

The maximum cutting depth using a scorer sawblade diameter of 90 mm is 4 mm .

Each time the main sawblade is replaced by a new one, or even a newly sharpened sawblade, the scorer has to be adjusted to match the main sawblade teeth width.

It is very important that this is done in the correct way to ensure a clean cut, free of splintering.

The supplied scoring sawblade has tapered teeth. Cutting depth also adjusts cutting width.

Before any lateral adjustment can be done the lateral lock (R) has to be loosened.

The lateral movement of the scorer sawblade is achieved by turning the excenter (S), lock again after adjustment (R).

7.6 Sliding table setup

When loading panels and when cutting using the parallel fence the sliding table should be locked.

To lock the table engage the index pin on the front end of the sliding table.

If over a long period of time many short movements of the sliding table are made by e.g. crosscutting solid wood, then it is possible that the ball carrier between the upper and lower part of the sliding table will move.

This means it will no longer be correctly positioned to allow the sliding table to slide through its full course.

The operator will feel resistance in the sliding table motion and the full stroke will not be achieved.

This effect can be corrected simply by pushing the table with a few short, light pushes against the buffer stop at the end, until the position of the ball carrier is adjusted and the table can be moved again along its full stroke.

It is recommended to clean the sliding table once a week, and to remove all sawdust and chips which gradually slow down the sliding table.

After all dust has been blown off, thin oil, such as WD-40, should be sprayed onto the steel guide rods on both the upper and lower part of the sliding table.

Never use a thick oil or grease!

7.7 Crosscut table setup

Crosscut table setup shall never be performed when the machine is running.

Lift the crosscut table onto telescopic arm support and slide onto sliding table T-groove and lock in place. Fig 30

Fig 30

Crosscut table and telescopic arm are aligned ex works (The table surface must be in level with the sliding table).

The crosscut table can be positioned along the sliding table.

Start the machine with care.

7.8 Crosscut fence setup

Crosscut fence setup shall never be performed when the machine is running.

The cross-cut table has 2 precision holes, allowing the crosscut fence to be put in 2 positions:

At the back and front of the cross-cut table.

Simply put the fence onto the crosscut table and lock it in position using the two knobs. Fig 31.

Fig 31

The 90° adjustable stops are factory set.

Calibration of the scale on the crosscut fence:

The scale on the fence is factory set and needs no further adjustments.

To check the settings, put the stop at a certain measure and cut off a sample.

Measure the exact length of the sample, unlock the screw which holds the fence pivoting T-nut and move the fence until the measurement corresponds to the length of the previously cut length.

When using the telescopic extension, the material stop has to be set to the very end to make the different scales correspond with one another.

The best way to check that all scales correspond, is to make several test cuts on the different scales.

7.9 Mitre fence setup

Mitre fence setup shall never be performed when the machine is running.

For good workpiece support, the fence profile must be set close to the saw blade (Fig 32)

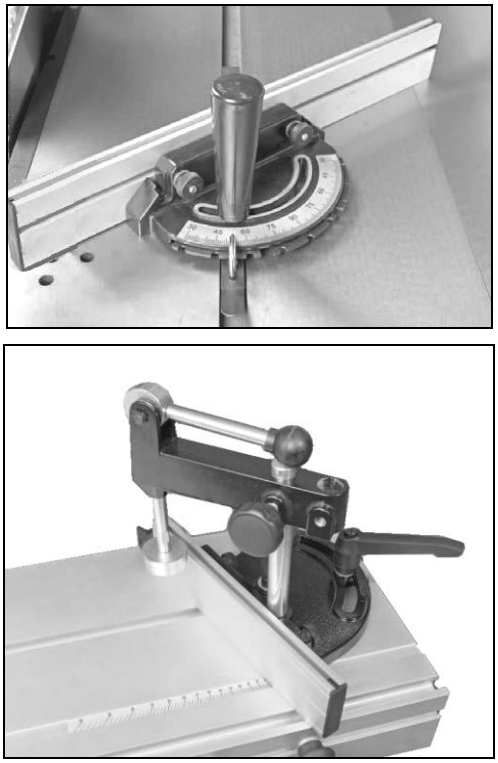

Fig 32

7.10 Rip fence setup

Rip fence setup shall never be performed when the machine is running.

To move the fence, lift the handle (1, Fig 33) halve way.

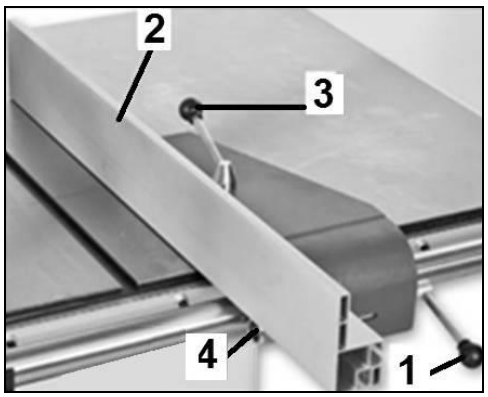

Fig 33

When cutting small workpieces or with the sawunit inclined at 45°, the fence profile must be used in the low position. (Fig 34).

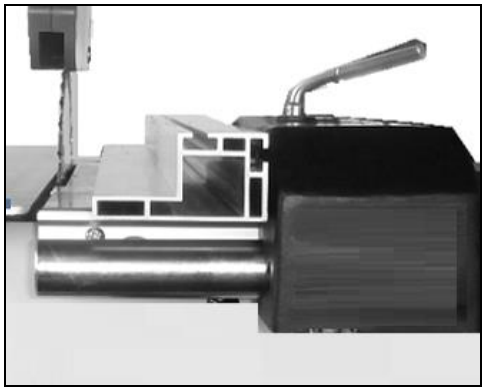

Fig 34

The rip fence has a micro adjust feature. Lift the handel (1) fully and rotate the micro adjust knob (4)

When cross cutting using the parallel fence, to avoid the wood getting stuck between the fence and the riving knife (resulting in a highly dangerous kickback) it is necessary to position the fence so that its end corresponds with the front of the sawblade. (Fig 35).

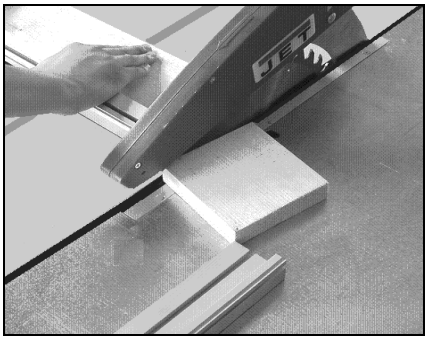

Fig 35

Start the machine with precaution.

The rip fence must be parallel to the sawblade and is adjusted at the factory.

8. Maintenance and inspection

General notes:
Maintenance, cleaning and repair work may only be carried out after the machine is protected against accidental starting by pulling the mains plug.

Repair and maintenance work on the electrical system may only be carried out by a qualified electrician.

Clean the machine regularly.

Inspect the proper function of the dust extraction daily.

Keep the inside of the cabinet clear of sawdust and wood chips. Make sure the motor fan and fan cover are also kept clear of sawdust.

After a days use push the sliding table all of the way forward and backward.

Remove rust from the table e.g. with

WD-40 and a Scotch-Brite™ Hand Pad.

Never smoke while cleaning the machine, and especially when using petrol, kerosene or other inflammable products.

This could lead to an explosion and serious burns for the operator.

All protective and safety devices must be re-attached immediately after completed cleaning, repair and maintenance work.

Defective safety devices must be replaced immediately.

Check saw blades regularly for faults.

Replace a defective sawblades immediately.

A worn table insert must be replaced.

A worn crosscut fence end cap must be replaced.

Main drive belt tensioning:

Check regularly the condition of the belts and, if necessary, tighten or replace.

Remove the rear machine access door.

Tension the belt by pushing the motor down with the tensioning screw (B, Fig 36).

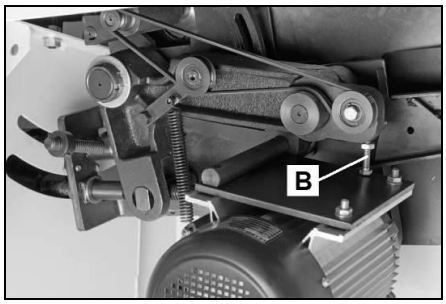

Fig 36

Make sure the belt is not over tensioned, because this could lead to damage of the saw arbor and bearings.

Main drive belt changing:

Move the blade tilt to 0˚ (Blade 90˚ to table) on the control panel and raise the blade as far as it will go.

Move the sliding panel all the way to the left and remove two M6x12 pan head screws to expose the internal blade guard that covers the blades and riving knife.

Remove the blade guard from the riving knife to expose the mounting assembly.

Remove the main blade.

Remove M8 Allen screws and remove the inner chip house. (Fig 37).

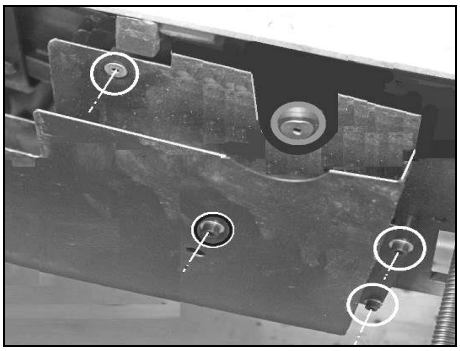

Fig 37

Note: for better access, tilt the saw blade.

Loosen the belt tension and remove the belt. (Fig 38).

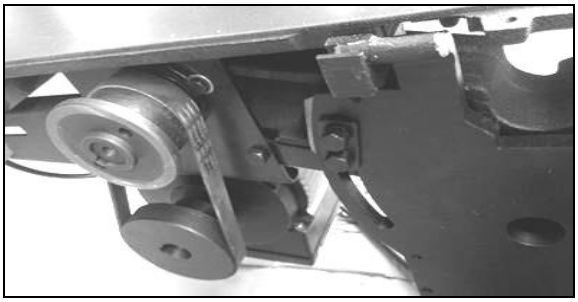

Fig 38

Replace new V-belt, tension belt, close the left panel, and re-mount inner chip house, blade, blade guard.

Reattach the rear machine access door.

Scoring unit belt tensioning:

The scoring unit belt is self tensioning by spring load (Fig 39).

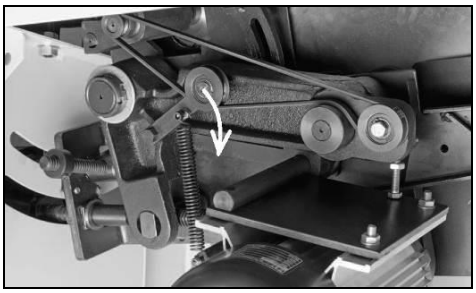

Fig 39

Scoring unit belt changing:

Move the blade tilt to 0˚ (Blade 90˚ to table) on the control panel and lower the blade as far as it will go.

Remove the 4 Allen screws on the top and bottom of right panel, and remove the left panel.

Push the tension pulley against the spring load.

Remove the old belt and replace new belt.

Re-mount the right panel.

Motor Break:

The motor break works electro-mechanically (break motor). If breaking time should exceed 10 seconds, the motor break assembly needs to be replaced. Contact your Jet service station immediately.

9. Trouble shooting

Motor doesn't start

*No electricity
-check mains and fuse.

*Defective switch, motor or cord
-consult an electrician.

*Overload has reacted
-Wait and start again.

*Lower sawblade cover still open
- Close cover correctly.

Machine vibrates excessively

*Stand on uneven floor
-adjust levelling screws for even support.

*dust on sawflanges
-clean saw arbor and flanges.

*defective sawblade
- replace sawblade immediately

*Bad V-belts
-replace V-belts

Cut is not accurately square

*Stops not adjusted correctly
-check with square and adjust stops.

Material binds blade when ripping

*Fence not aligned with sawblade
-check and adjust rip fence.

*Wrapped wood
-select another piece of wood.

Material kicked back from blade

*Fence not aligned with sawblade
-check and adjust rip fence.

*Raving knive not in place
-high danger, mount immediately with saw guard.

Cutting surfaces is bad

*Wrong sawblade used

*Blade mounted backwards

*Resin collection on sawblade

*Sawblade is dull

*Workpiece inhomogeneous

*Feed pressure too high
-do not force the workpiece.

Blade does not raise or tilt

*Sawdust in mechanisms
-clean-and regrease.

Sliding table does not move

*Sawdust in bearing guides
-wipe out any sawdust.

10. Environmental protection

Protect the environment.

Your appliance contains valuable materials which can be recovered or recycled. Please leave it at a specialized institution.

This symbol indicates separate collection for electrical and electronic equipment required under the WEEE Directive (Directive 2012/19/EC) and is effective only within the European Union.

11. Available accessories

Refer to the JET-Pricelist

for various accessories.